XW Pro 6848 NA

Installation Guide

990-91228C-01

February 2021

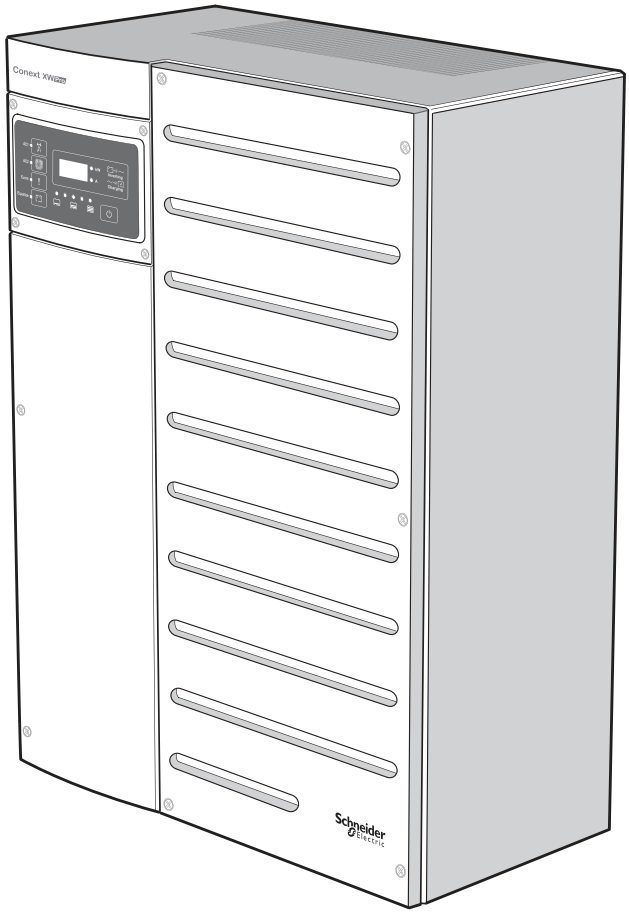

https://solar.schneider-electric.com

Copyright © 2021 Schneider Electric. All Rights Reserved.

Trademarks are owned by Schneider Electric Industries SAS or its affiliated companies. Other trademarks are owned by their respective companies.

Exclusion for Documentation

UNLESS SPECIFICALLY AGREED TO IN WRITING, SELLER

(A) MAKES NO WARRANTY AS TO THE ACCURACY, SUFFICIENCY OR SUITABILITY OF ANY TECHNICAL OR OTHER INFORMATION PROVIDED IN ITS MANUALS OR OTHER DOCUMENTATION;

(B) ASSUMES NO RESPONSIBILITY OR LIABILITY FOR LOSSES, DAMAGES, COSTS OR EXPENSES, WHETHER SPECIAL, DIRECT, INDIRECT, CONSEQUENTIAL OR INCIDENTAL, WHICH MIGHT ARISE OUT OF THE USE OF SUCH INFORMATION. THE USE OF ANY SUCH INFORMATION WILL BE ENTIRELY AT THE USER'S RISK; AND

(C) REMINDS YOU THAT IF THIS MANUAL IS IN ANY LANGUAGE OTHER THAN ENGLISH, ALTHOUGH STEPS HAVE BEEN TAKEN TO MAINTAIN THE ACCURACY OF THE TRANSLATION, THE ACCURACY CANNOT BE GUARANTEED. APPROVED CONTENT IS CONTAINED WITH THE ENGLISH LANGUAGE VERSION WHICH IS POSTED AT https://solar.schneider-electric.com.

Document Number: 990-91228C-01		**Date:** February 2021
Product Part Number:	XW Pro 6848 NA	865-6848-21

Contact Information

For country-specific details, please contact your local Schneider Electric Sales Representative or visit the Schneider Electric Solar Business website at: https://solar.schneider-electric.com

READ AND SAVE THESE INSTRUCTIONS

Safety Information

Important Information

Read these instructions carefully and look at the equipment to become familiar with the device before trying to install, operate, service or maintain it. The following special messages may appear throughout this documentation or on the equipment to warn of potential hazards or to call attention to information that clarifies or simplifies a procedure.

The addition of either symbol to a “Danger” or “Warning” safety label indicates that an electrical hazard exists which will result in personal injury if the instructions are not followed.

This is the safety alert symbol. It is used to alert you to potential personal injury hazards. Obey all safety messages that follow this symbol to avoid possible injury or death.

⚠ DANGER

DANGER indicates a hazardous situation which, if not avoided, **will result in** death or serious injury.

⚠ WARNING

WARNING indicates a hazardous situation which, if not avoided, **could result in** death or serious injury.

⚠ CAUTION

CAUTION indicates a hazardous situation which, if not avoided, **could result in** minor or moderate injury.

NOTICE

NOTICE is used to address practices not related to physical injury.

Please Note

Electrical equipment should be installed, operated, serviced, and maintained only by qualified personnel. No responsibility is assumed by Schneider Electric for any consequences arising out of the use of this material.

A qualified person is one who has skills and knowledge related to the construction, installation, and operation of electrical equipment and has received safety training to recognize and avoid the hazards involved. For more information, see *Audience*.

Label Symbols

NOTE: The term "ground" is equivalent to "earth", and the use of these terms depends on local codes and standards. This document uses the term "ground" throughout.

The following symbols appear on labels on or in the inverter.

Hazardous voltage

Hot surface

Stored energy hazard discharge time

Refer to the Installation or Operation instructions

Protective (grounding) conductor terminal

Direct current

Alternating current

Radio Frequency Interference Notices

Federal Communications Commission (FCC)

This equipment has been tested and found to comply with the limits for a Class A digital device, pursuant to part 15 of the FCC Rules. These limits are designed to provide reasonable protection against harmful interference in a residential installation. This equipment generates, uses, and can radiate radio frequency energy and, if not installed and used in accordance with the instructions, may cause harmful interference to radio communications. However, there is no guarantee that interference will not occur in a particular installation. If this equipment does cause harmful interference to radio or television reception, which can be determined by turning the equipment off and on, the user is encouraged to try to correct the interference by one or more of the following measures:

- Reorient or relocate the receiving antenna.
- Increase the separation between the equipment and the receiver.
- Connect the equipment to a circuit different from that to which the receiver is connected.
- Consult the dealer or an experienced radio/TV technician for help.

Audience

This guide is intended for any qualified personnel planning to install the XW Pro inverter/charger and related system components.The qualified personnel have training, knowledge, and experience in:

- Installing electrical equipment.
- Applying all applicable installation codes.
- Analyzing and reducing the hazards involved in performing electrical work.
- Installing and configuring batteries.
- Selecting and using Personal Protective Equipment (PPE).

Servicing of batteries must only be performed or supervised by qualified personnel with knowledge of batteries and their required precautions. Keep unqualified personnel away from batteries.

No responsibility is assumed by Schneider Electric for any consequences arising out of the use of this material.

About

Purpose

This guide provides explanations and procedures for installing Schneider Electric XW Pro inverter/charger.

- Operational instructions are available in the *XW Pro Owner's Guide (document number 990-91227)*.
- Instructions for configuring inverter settings are also available in the *XW Pro Owner's Guide (document number 990-91227)*.

For explanations and procedures related to other products, please contact the manufacturer of those products.

Scope

The Installation Guide provides safety guidelines, detailed planning, and procedures for installing the XW Pro inverter/charger and related system components. It does not provide details about configuration, operation, maintenance, or troubleshooting. See the Operation Guide or Owner's Guide of each device for this information. This Installation Guide does not provide details about particular brands of batteries, photoelectric cells, or generators. Consult individual battery manufacturers for this information.

Abbreviations and Acronyms

CEC	California Energy Commission
CSA	Canadian Standards Association
GT	Grid Tie
LCD	Liquid Crystal Display
LED	Light Emitting Diode
MPPT	Maximum Power Point Tracking
NEC	US National Electrical Code NFPA-70
PV	Photovoltaic
PVGFP	PV Ground Fault Protection
UL	Underwriters Laboratories
VAC	Volts Alternating Current
VDC	Volts Direct Current

Related Information

Find more information about Schneider Electric as well as its products and services at: www.schneider-electric.com.

For specific information on Solar, visit the Schneider Electric Solar Business website at: https://solar.schneider-electric.com.

For available accessories, see *"Optional Accessories" on page 18*.

Product Safety Information

IMPORTANT: Remember to read and follow all product safety information in this document.

General Safety Instructions

Before using the inverter/charger, read all instructions and cautionary markings on the unit, the batteries, and all appropriate sections of this manual.

- Use of accessories not recommended or sold by the manufacturer may result in a risk of fire, electric shock, or injury to persons.
- The inverter/charger is designed to be permanently connected to your AC and DC electrical systems. The manufacturer recommends that all wiring be done by a certified technician or electrician to ensure adherence to the local and national electrical codes applicable in your jurisdiction.
- To avoid a risk of fire and electric shock, make sure that existing wiring is in good condition and that wire is not undersized. Do not operate the inverter/charger with damaged or substandard wiring.
- Do not operate the inverter/charger if it has been damaged in any way.
- Most of the parts in this unit are not user-serviceable parts.Do not disassemble the inverter/charger except where noted for connecting wiring and cabling. See your warranty for instructions on obtaining service. Attempting to service the unit yourself may result in a risk of electrical shock or fire. Internal capacitors remain charged after all power is disconnected.
- To reduce the risk of electrical shock, disconnect both AC and DC power from the inverter/charger before attempting any maintenance or cleaning or working on any components connected to the inverter/charger. Putting the unit in Standby mode will not reduce this risk.
- The inverter/charger must be provided with an equipment-grounding conductor connected to the AC input ground.
- Do not expose this unit to rain, snow, or liquids of any type. This product is designed for indoor use only. Damp environments will significantly shorten the life of this product and corrosion caused by dampness will not be covered by the product warranty.
- To reduce the chance of short-circuits, always use insulated tools when installing or working with this equipment.
- Remove personal metal items such as rings, bracelets, necklaces, and watches when working with electrical equipment.
- Do not expose this unit to excessive shock or vibration. This product is designed for stationary indoor use only. Mechanical fatigue caused by excessive shock or vibration can significantly shorten the life of this product and will not be covered by the product warranty.

DANGER

HAZARD OF ELECTRIC SHOCK, EXPLOSION, ARC FLASH, AND FIRE

This document is in addition to, and incorporates by reference, the relevant product manuals for XW Pro inverter/charger. Before reviewing this document, you must read the relevant product manuals. Unless specified, information on safety, specifications, installation and operation is as shown in the primary documentation received with the product. Ensure you are familiar with that information before proceeding.

Failure to follow these instructions will result in death or serious injury.

DANGER

HAZARD OF ELECTRIC SHOCK, EXPLOSION, ARC FLASH, AND FIRE

- Apply appropriate personal protective equipment (PPE) and follow safe electrical work practices. See NFPA 70E or CSA Z462.
- This equipment must only be installed and serviced by qualified electrical personnel.
- Never operate energized with covers removed
- Energized from multiple sources. Before removing covers identify all sources, de-energize, lock-out, and tag-out and wait 5 minutes for circuits to discharge
- Always use a properly rated voltage sensing device to confirm all circuits are de-energized.

Failure to follow these instructions will result in death or serious injury.

DANGER

HAZARD OF ELECTRIC SHOCK, EXPLOSION, ARC FLASH, AND FIRE

- Disconnect negative and positive DC conductors before servicing. DC conductors are to be treated as Hazardous Live and must be disconnected.
- Normally GROUNDED conductors may be UNGROUNDED and ENERGIZED when a GROUND FAULT is indicated on the front panel. Must be serviced by qualified personnel.

Failure to follow these instructions will result in death or serious injury.

Precautions when Working with Batteries

NOTE: Battery work and maintenance must be done by qualified personnel knowledgeable about batteries to help ensure compliance with battery handling and maintenance safety precautions.

⚠ ⚠ DANGER

HAZARD OF ELECTRIC SHOCK, EXPLOSION, OR ARC FLASH

- Remove watches, rings, or other metal objects.
- This equipment must only be installed and serviced by qualified electrical personnel.
- Keep sparks and flames away from the batteries.
- Use tools with insulated handles.
- Wear protective glasses, gloves and boots.
- Do not lay tools or other metal parts on top of batteries.

Failure to follow these instructions will result in death or serious injury.

⚠ ⚠ DANGER

HAZARD OF ELECTRICAL SHOCK, EXPLOSION, OR FIRE

- Battery Circuit Breakers must be installed according to the specifications and requirements defined by Schneider Electric.
- Servicing of batteries must only be performed by qualified personnel knowledgeable about batteries and the required precautions. Keep unqualified personnel away from batteries.
- Disconnect the charging source prior to connecting or disconnecting battery terminals.

Failure to follow these instructions will result in death or serious injury.

Limitations on Use

⚠ WARNING

HAZARD DUE TO UNINTENDED USE

The XW Pro inverter is not intended for use in connection with life support systems or other medical equipment or devices. The XW Pro inverter can only be used in grid-interconnected, off grid, and integrated PV systems. It is not suitable for any other application areas.

Failure to follow these instructions can result in death, serious injury, or equipment damage.

Explosive Gas Precautions

⚠ WARNING

EXPLOSION HAZARD

The XW Pro is not ignition protected. To prevent fire or explosion, do not install this product in locations that require ignition-protected equipment. This includes any space containing gasoline-powered machinery, fuel tanks, as well as joints, fittings, or other connections between components of the fuel system.

Failure to follow these instructions can result in death, serious injury, or equipment damage.

Working in the vicinity of lead acid batteries is dangerous. Batteries generate explosive gases during normal operation. Therefore, you must read this Installation Guide and follow the instructions exactly before installing or using your inverter/charger.

To reduce the risk of battery explosion, follow these instructions and those published by the battery manufacturer and the manufacturer of the equipment in which the battery is installed.

Maintenance

The XW Pro does not require scheduled maintenance. However it is required to be clear of dust and debris, especially around air intake and exhaust areas, at all times. Use a soft-bristle brush to clear the area around the air intake and exhaust.

The surface of XW Pro can be cleaned by using a lint-free soft cloth.

NOTICE

STATEMENT OF HAZARD

Use only a soft cloth dampened with water and mild soap to clean the inverter.

Do not use solvents or chemicals that are corrosive or flammable.

Failure to follow these instructions can result in equipment damage.

Contents

Safety Information ... 2
Label Symbols ... 3
Radio Frequency Interference Notices ... 4
Audience ... 5
About ... 6
- Purpose ... 6
- Scope ... 6
- Abbreviations and Acronyms ... 6
- Related Information ... 7

Product Safety Information ... 8
- General Safety Instructions ... 8
  - Precautions when Working with Batteries ... 10
  - Limitations on Use ... 10
  - Explosive Gas Precautions ... 11
  - Maintenance ... 11

Introduction ... 16
- Overview ... 17
- Inside the Box ... 17
  - XW Pro and System Components ... 17
  - Battery Temperature Sensor ... 17
  - Conext XW Jumpers (For Single-Phase Conversion) ... 18
- XW Pro Features ... 18
- Optional Accessories ... 18
  - Conduit Box ... 19
  - Power Distribution Panel (PDP) ... 19
  - PDP 120/240V 60A Breaker Kit ... 20
  - Conext MPPT 60 150 Solar Charge Controller ... 21
  - Conext MPPT 80 600 Solar Charge Controller ... 21
  - Conext Automatic Generator Start (AGS) ... 22
  - Conext Gateway ... 22
  - Conext Battery Monitor ... 22
  - Breaker Kits ... 23

Pre-Installation Planning ... 24
- Pre-Installation ... 25
  - Planning the Installation ... 25
  - Installation Tools and Materials ... 25
  - Location ... 26
  - Clearance Requirements ... 26
  - Knockout Selection ... 28
  - Air Filter and AUX Port Connector Installation ... 29
- Wall-Mounting ... 30
  - Installing the Mounting Plate ... 31

Wall-Mounting the XW Pro and PDP 32
Installing the XW Conduit Box 34
Communications Network Preparation 36
Battery Bank Preparation 37
Battery Bank Requirements 38
Battery Cable Requirements 38
Torque Values 41
Torque Values for the XW Pro 41
Torque Values for the Power Distribution Panel (PDP) 41
Wiring 44
Removing the AC Access Panel and PDP Internal Faceplates 46
Removing AC Access Panel 46
Removing Power Distribution Panel Internal Faceplate 47
Communication Ports and BTS Port 49
AUX Port 49
Wiring the XW Pro with a PDP 52
Grounding the XW Pro Inverter/Charger 52
Grounding the DC System 52
Installing the Battery Temperature Sensor 53
Making DC Connections 55
Making AC Connections 59
AC System Bonding 62
AC Wiring with XW Pro Power Distribution Panel 63
Basic Functional Test – Single Inverter 70
Confirming All Connections 70
Applying DC Power to the Inverter 71
Preparing for Functional Tests 72
Upgrading the Firmware 72
Managing Compliance Regions 73
Enabling the Inverter 74
Checking AC Voltage 77
Confirming Battery Charger Operation 77
Wiring Additional XW Pro units with a PDP 79
Pre-Installation Steps 79
Grounding XW Pro Inverter/Charger 81
Installing a Dual Inverter/Charger System 81
Installing Bypass Interlock Plate 86
Installing a Triple Inverter/Charger System 86
Basic Functional Test - Multiple Inverters 92
Wiring a Balanced Three-Phase System 94
Pre-Installation Steps 94
XW Pro Inverter/Charger Grounding 95
DC Wiring for a Three-Phase System 96
Bypass Interlock Plate Installation (Three-Phase) 102

Wiring the XW Pro Inverter/Charger without a PDP 102
Pre-Installation Steps 103
Feed-in Protection Requirements 104
XW Pro Inverter/Charger Grounding 104
Grounding the DC System 105
Communication 112
The Xanbus Network 113
Network Components 113
Installing the Network 116
Before You Begin the Installation 116
Installation Tools and Materials 116
Installing AC sync and Xanbus cables 116
Guidelines for Routing the Xanbus Cables 118
Access Installation 120
Conext Gateway Installation 121
Installing the Conext Gateway via the Xanbus Network 121
Verifying the Installation 122
Specifications 124
Electrical Specifications 125
Mechanical and Regulatory Specifications 127
Regulatory Approvals 128
Grid Support Utility Interactive Functions 129
Wiring Diagrams 130
Wiring Diagrams 131
Single-Inverter System (Backup Only) Without a Power Distribution Panel (PDP) 132
Single-Inverter System (Backup Only) With a Power Distribution Panel (PDP) 133
Single-Inverter System Renewable Energy (Solar) 134
Dual-Inverter System Renewable Energy (Solar) 135
Converting Split-phase to Single-phase 136
Converting 120 V/240 V Split-phase to 120 V Single-phase 137
Installation Tools and Materials 138
Disconnecting Power Sources 138
AC Access Panel Removal 139
Reconfiguring the Secondary Transformer Wires on X1 and X2 Connectors 141
Reconfiguring the AC Ports on the Load, AC1, and AC2 Connectors 143
Replacing the Firmware 144
Updating the Label 145

1 Introduction

What's in This Chapter?

Overview ***17***
Inside the Box ***17***
XW Pro and System Components *17*
Battery Temperature Sensor *17*
Conext XW Jumpers (For Single-Phase Conversion) *18*
XW Pro Features ***18***
Optional Accessories ***18***
Conduit Box *19*
Power Distribution Panel (PDP) *19*
PDP 120/240V 60A Breaker Kit *20*
Conext MPPT 60 150 Solar Charge Controller *21*
Conext MPPT 80 600 Solar Charge Controller *21*
Conext Automatic Generator Start (AGS) *22*
Conext Gateway *22*
Conext Battery Monitor *22*
Breaker Kits *23*

Overview

The XW Pro is a modular building block sine-wave inverter/charger that can be used for residential and commercial battery based off-grid, grid backup, and grid interactive applications.

The XW Pro is a self-contained DC to AC inverter, battery charger, and integrated AC transfer switch. It is configurable in a hybrid system to operate with generators and renewable energy sources. These configurations are capable of extending battery based off-grid/backup autonomy.

Inside the Box

XW Pro and System Components

The following system components are included in this package. If any items are missing, contact your authorized dealer.

Figure 1 System Components

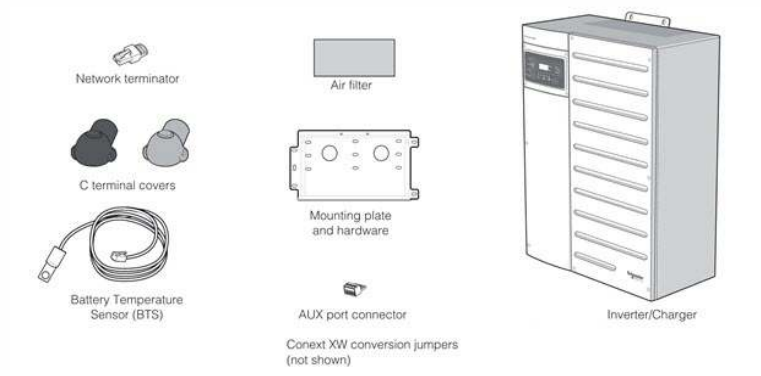

Not shown: ferrite bead for installation on Xanbus cables, see *Figure 62 on page 113*.

Battery Temperature Sensor

The Battery Temperature Sensor (BTS) included in this package monitors the temperature of the battery bank and adjusts the charging accordingly. For installation instructions, see *"Installing the Battery Temperature Sensor" on page 53*.

Conext XW Jumpers (For Single-Phase Conversion)

Conext XW Jumpers are used to reconfigure a standard unit 120V/240V, three-wire, split-phase model to accept a 120 V, 2-wire, single-phase connection. Use the jumpers to reconfigure the transformer wires. For more information, see *"Converting 120 V/240 V Split-phase to 120 V Single-phase" on page 137*.

XW Pro Features

Figure 2 Features

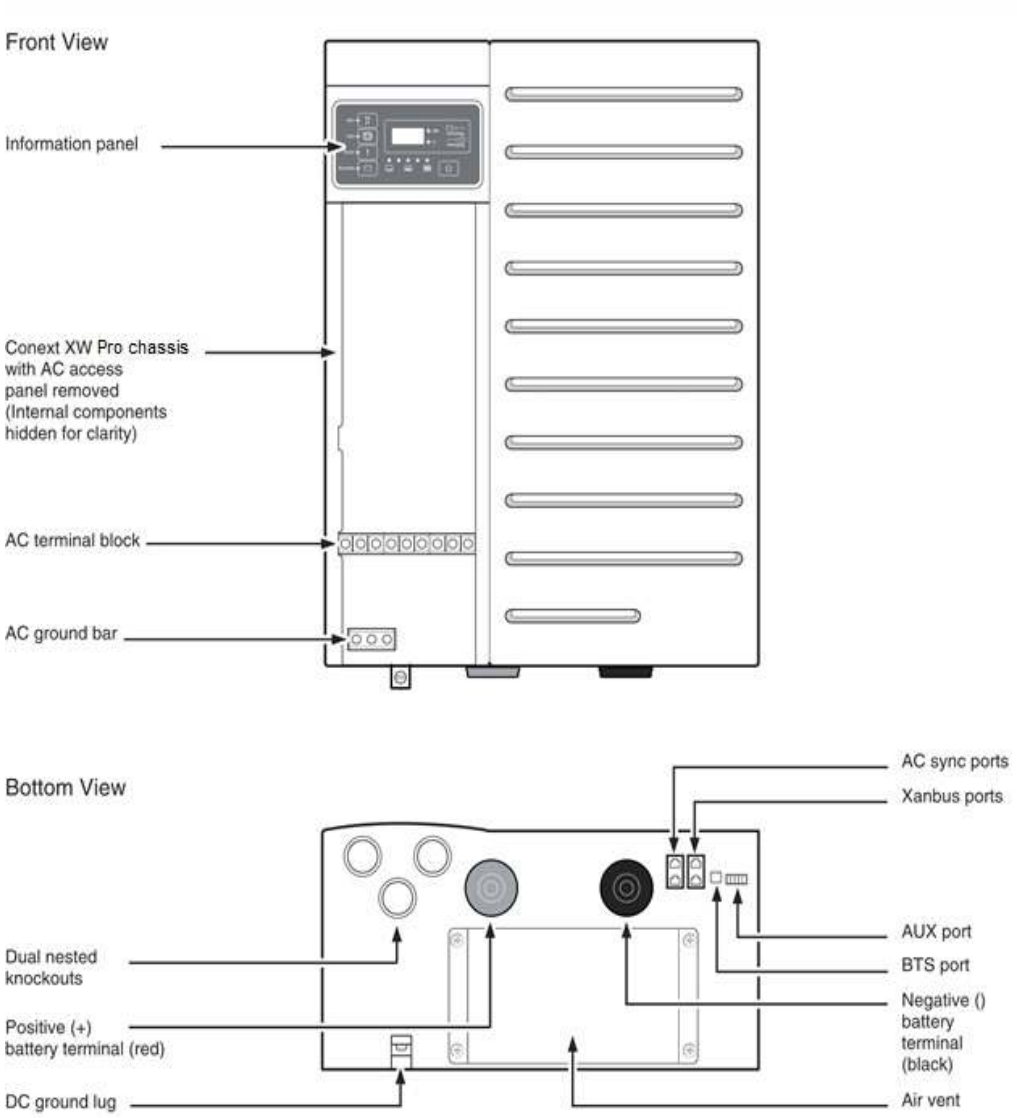

Optional Accessories

The following optional accessories are available for the XW Pro inverter/charger.

For an up-to-date list, call an authorized dealer or visit **https://solar.schneider-electric.com**.

Conduit Box

Part Number 865-1025-01

The Conduit Box provides an enclosure over the bottom of the XW Pro and covers the cabling that runs underneath.

For installation instructions, see *Installing the XW Conduit Box on page 34*.

Figure 3 Conduit Box

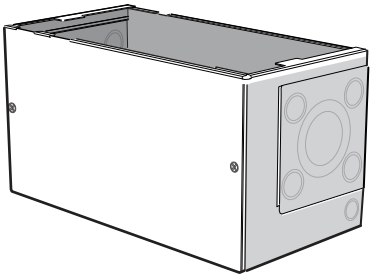

Note: Your installation may require the inclusion of the Conduit Box, depending on local electrical code. Consult your local electrical authority to ensure your installation is code-compliant.

Power Distribution Panel (PDP)

Part Number 865-1015-01

The Power Distribution Panel (PDP) is factory wired and labeled with everything to support a single-inverter installation.

Internal wiring and breakers can be added to expand the XW Pro with up to three inverters, four charge controllers, or other equipment to support 120/240 volt, three-wire, single-phase systems.

The PDP interfaces with the following Conext products:

- XW Pro 6848 NA inverter/charger
- Conext MPPT solar charge controllers (breakers and wiring not included)

The XW Pro Power Distribution Panel includes the components shown below.

Figure 4 XW Pro Power Distribution Panel with Conduit Box

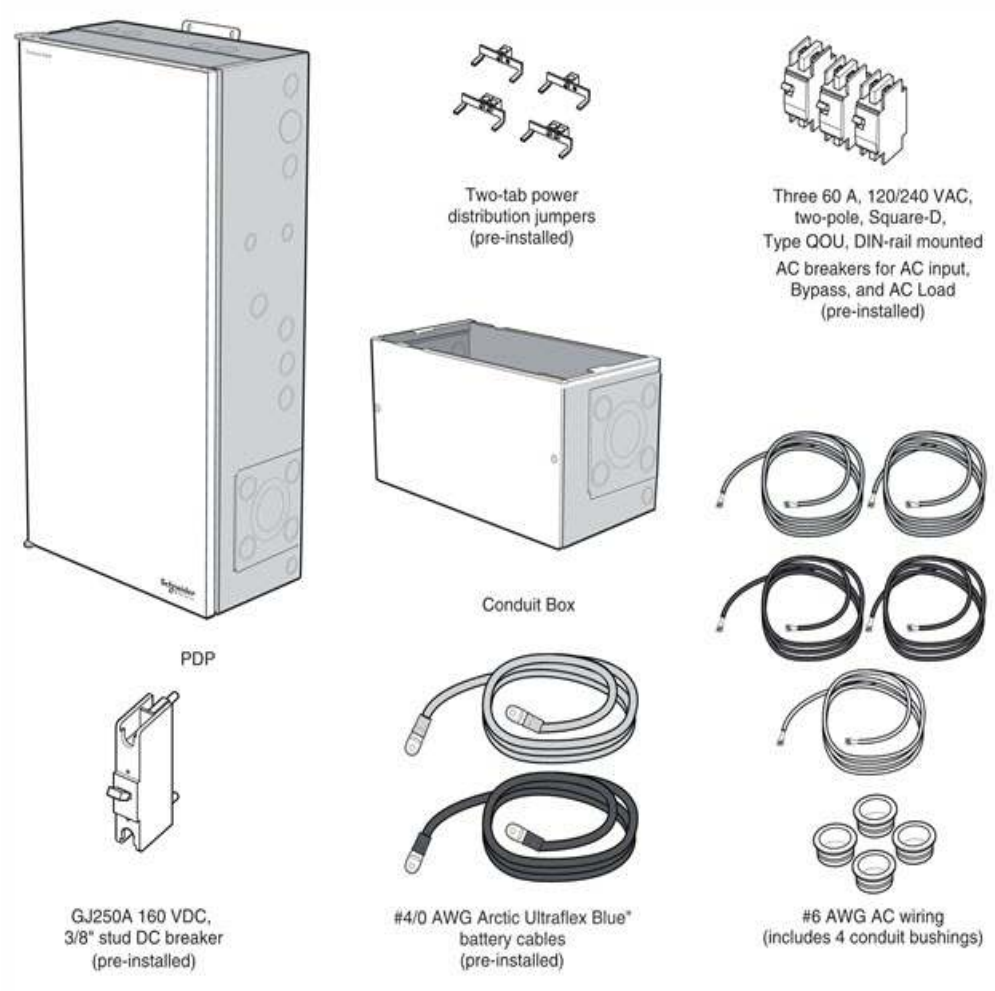

Not shown:

- One ground terminal bus bar
- One neutral terminal bus bar
- One battery negative terminal bus bar
- Cable ties (3x)
- Xanbus clip-on ferrite bead

PDP 120/240V 60A Breaker Kit

Part Number 865-1215-01

Included: Three 60 A, 120/240 VAC, two-pole, Square-D, type QOU, DIN-rail mountable AC breakers, jumpers, bypass interlock.

Conext MPPT 60 150 Solar Charge Controller

Part Number 865-1030-1

The Conext MPPT solar charge controller is a photovoltaic (PV) charge controller that tracks the maximum power point of a PV array to deliver the maximum available current for charging batteries.

For more information, go to **https://solar.schneider-electric.com**.

Figure 5 Conext MPPT 60 150

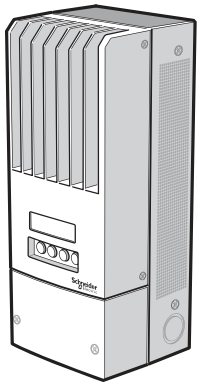

Conext MPPT 80 600 Solar Charge Controller

Part Number 865-1032

The Conext MPPT solar charge controller offers an industry-first set of integration features and top performance that allows for large PV array systems to be easily installed and connected to the battery bank at the lowest possible cost.

For more information, go to **http://solar.schneider-electric.com**.

Figure 6 Conext MPPT 80 600

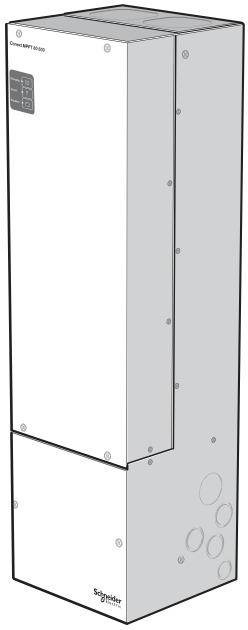

Conext Automatic Generator Start (AGS)

Part Number 865-1060-01

The Conext AGS can automatically start and stop a generator, providing your XW Pro Inverter/Charger with power to recharge depleted batteries while powering your loads. The AGS adds intelligence to power management and minimizes time spent monitoring batteries and inverter loads.

For more information, see the *Conext Automatic Generator Start Owner's Guide.*

Figure 7 Conext AGS

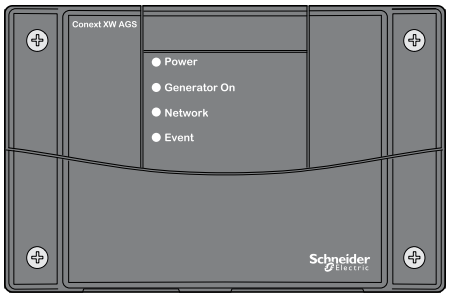

Conext Gateway

Part Number 865-0329

The Conext Gateway is a multi-function communication device that provides an overall view of system performance for residential power monitoring systems. It also provides a communications gateway between a network of Xanbus™-enabled devices and Modbus devices.

For more information, see the *Conext Gateway Owner's Guide*.

Figure 8 Conext Gateway

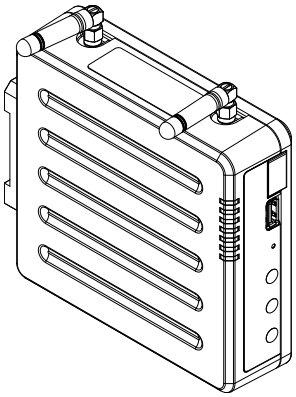

Conext Battery Monitor

Part Number 865-1080-01

The Battery Monitor is Xanbus-enabled, and features a local display to selectively show the estimated operating voltage, current, consumed amp-hours, remaining capacity and remaining hours in your 48 V battery bank.

For more information, see the *Conext Battery Monitor Quick Start Guide.*

Figure 9 Conext Battery Monitor

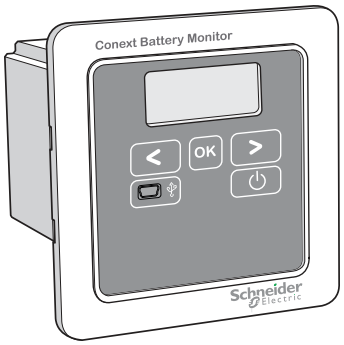

Breaker Kits

60A, 160VDC Panel Mount DC Breaker

Part Number 865-DCBRK-60

80A, 125VDC Panel Mount DC Breaker

Part Number 865-DCBRK-80

100A, 125VDC Panel Mount DC Breaker

Part Number 865-DCBRK-100

250A, 160VDC Panel Mount DC Breaker

Part Number 865-DCBRK-250

2 Pre-Installation Planning

What's in This Chapter?

Pre-Installation ***25***
Planning the Installation *25*
Installation Tools and Materials *25*
Location *26*
Clearance Requirements *26*
Knockout Selection *28*
Air Filter and AUX Port Connector Installation *29*
Wall-Mounting ***30***
Installing the Mounting Plate *31*
Wall-Mounting the XW Pro and PDP *32*
Installing the XW Conduit Box *34*
Communications Network Preparation ***36***
Battery Bank Preparation ***37***
Battery Bank Requirements *38*
Battery Cable Requirements *38*
Torque Values ***41***
Torque Values for the XW Pro *41*
Torque Values for the Power Distribution Panel (PDP) *41*

Pre-Installation

Before installing the XW Pro, read all instructions and cautionary markings in this Installation Guide.

Note: Obtain all necessary permits prior to starting the installation. **Installations must meet all local codes and standards.** Installation of this equipment should only be performed by skilled personnel such as qualified electricians and Certified Renewable Energy (RE) System installers.

Note: If multiple XW Pro's are planned, refer to the XW Pro Multi-unit Design Guide (990-91373) for additional details and system solutions for larger installations.

⚠ WARNING

HEAVY EQUIPMENT

The XW Pro weighs approximately 120 lbs (54 kg). A two-person lift is required. To prevent personal injury, always use proper lifting techniques during installation.

Failure to follow these instructions can result in death, serious injury, or equipment damage.

NOTICE

EQUIPMENT DAMAGE

- The Automatic Transfer Relays are rated at 60 A.
- Loads connected at AC OUT must not exceed the inverter's overload ratings or the 60 A limit, whichever is lower. Unless an external contactor or external transfer switch is used, the 60 A limit also applies to loads connected to the AC OUT bus of multiple inverters connected in parallel.

Failure to follow these instructions can result in equipment damage.

Planning the Installation

- Read this entire chapter before beginning the installation. It is important to plan the installation from beginning to end.
- Assemble all tools and materials needed for the installation.
- If multiple XW Pro's are planned, refer to the XW Pro Multi-unit Design Guide (990-91373).

Installation Tools and Materials

To complete the installation, you will need the following tools:

- Socket wrench, appropriately sized
- Phillips head screwdriver, appropriately sized
- Level

Depending on your installation, additional hardware may be required. The following items are not included with the XW Pro:

- Battery cables
- Grounding wire: #14 AWG to #2 AWG (1.63mm to 6.54mm)
- Lag bolts to secure the mounting plates
- Hacksaw for cutting busbars
- Screws for mounting the Conduit Box
- Additional wiring to connect the PDP to the inverter load sub-panel and utility grid
- Appropriate materials and hardware for additional wall-mount support

Location

The XW Pro is certified for dry, indoor (heated or unheated) installations only.

Locate any electronic equipment susceptible to radio frequency and electromagnetic interference as far away from the inverter as possible.

Fire safety

⚠ WARNING

IGNITION AND FIRE HAZARD

This equipment is not ignition protected. To prevent fire or explosion, do not install this product in locations that require ignition-protected equipment. This includes any confined space containing lead acid batteries, or flammable chemicals such as, natural gas (NG), liquid petroleum gas (LPG) or gasoline (Benzine/Petrol).

- Do not install in a confined space with machinery powered by flammable chemicals, or storage tanks, fittings, or other connections between components of fuel or flammable chemical systems.
- Do not install the inverter on a flammable surface. If installing the inverter on a wood surface, ensure that the wood is flame retardant.
- Do not install the inverter near readily flammable materials such as cloth, paper, straw, or plastic sheeting. Keep flammable materials a minimum distance of 600 cm (24 in.) from the top surface and 30 cm (12 in.) from either side surface and the front of the XW Pro Inverter/Charger.

Failure to follow these instructions can result in death, serious injury, or equipment damage.

Clearance Requirements

Provide at least 91 cm (36 in.) of clearance in front of the inverter, and a minimum of 15 cm (6 in.) of clearance at the top and bottom of the inverter for ventilation. Ensure the vents remain unobstructed, and that the XW Pro Power Distribution Panel door has adequate room to fully open.

Figure 10 Example of clearance requirements for a XW Pro with PDP

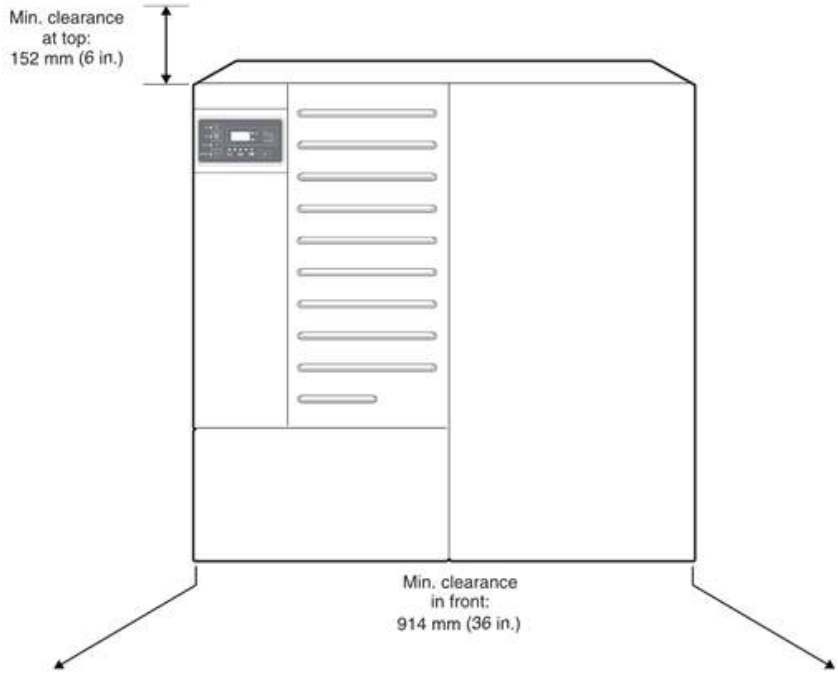

Knockout Selection

Note: Do not drill, cut, or punch holes into the XW Pro, Conduit Box or Power Distribution Panel (PDP). Use only the knockouts provided for conduit entry.

The XW Pro, Power Distribution Panel (PDP), and Conduit Box are equipped with nested dual knockouts for wiring through conduits.

Read *"Removing the AC Access Panel and PDP Internal Faceplates" on page 46* and choose the knockouts for your installation.

See below, for an example of available knockouts along the top and side of the Power Distribution Panel (PDP).

Figure 11 Example of available knockouts on the PDP

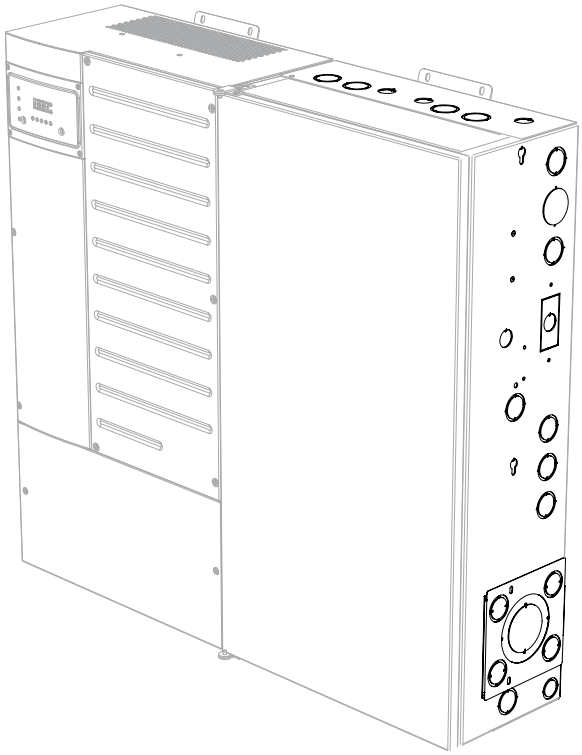

Remove your choice of knockouts from the XW Pro chassis, Conduit Box, and/or Power Distribution Panel (PDP). Verify that no debris remains inside the chassis. Insert appropriately-sized conduit bushings into each conduit hole.

Air Filter and AUX Port Connector Installation

Insert the air filter by tucking it into the grooves on the sides of the air vent cover, see *Figure 12* .

If you are planning to use the auxiliary (AUX) port features, insert the AUX port connector into the AUX portr, see *Figure 12* .

For more information, see *AUX Port on page 49* of this Guide.

Figure 12 Air Filter and AUX Port Connector Installation

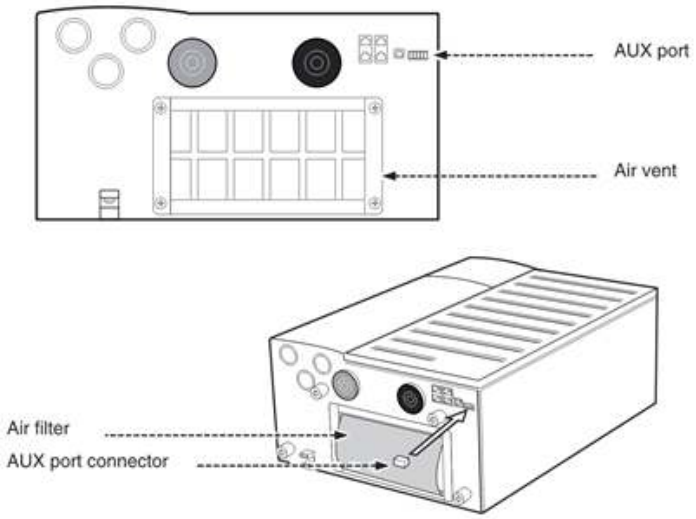

Wall-Mounting

⚠ WARNING

HEAVY EQUIPMENT

The XW Pro can cause serious injury if it falls or is dropped on a person.

For structural and seismic stability, the XW Pro must be mounted onto a vertical supporting surface strong enough to support a minimum of 500 lbs (227 kg).

Failure to follow these instructions can result in death, serious injury, or equipment damage.

A mounting plate is included with each XW Pro and Power Distribution Panel (PDP), designed to meet standards for structural and seismic stability. When properly installed, the system also meets Section 59 of UL 1741 for Static Loads.

Each XW Pro and Power Distribution Panel (PDP) requires a separate generic-Mounting Plate. Attach the mounting plate to the wall before you attach the XW Pro or Power Distribution Panel (PDP) to the mounting plate.

Each Mounting Plate requires a minimum of four ¼-inch diameter lag bolts or other fasteners (not included). The fasteners must be strong enough to support 500 lbs (227 kg).

The type of fastener required to secure the mounting plate varies according to the vertical surface and wall structure of your installation location. For a list of recommended fasteners, see *Table 1*, below.

Table 1 Recommended fasteners

Structure	Required Fastener	Screws Per Plate
Wood studs at 16"on-center (O.C.)	1/4" Ø × 3 1/2" long lag screw	Four
Wood studs not at 16" O.C. (3/4"minimum fire-rated plywood[1] panel required)	1/4" Ø × 1" long wood screw	Six
Steel studs at 16" O.C. (minimum 18 gauge)	1/4" Ø self-drilling screw	Four

The holes of each Mounting Plate are spaced 16 inches (40 cm) apart, so that the mounting plate will span two wall studs spaced 16 inches on-center. Additional mounting holes are provided to allow for other mounting options.

[1] Fire rated (treated fire resistant plywood can only be used in regions where national and local building code allow the use of such materials. Use similar alternative building materials where the building codes do not allow for fire rated wood products for electrical installations.

Figure 13 Mounting plate dimensions

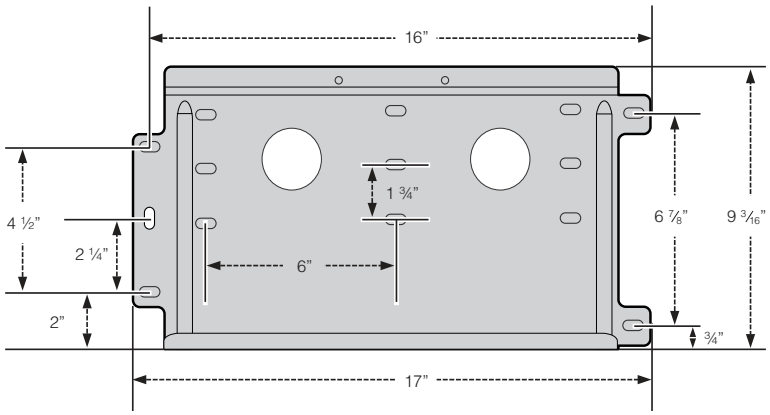

Note: If the wall does not have 16-inch on-center studs, you will need to provide adequate support for the Mounting Plates. For example, a sheet of fire-rated plywood[2] can be attached to the wall, and the Mounting Plates can then be attached to plywood.

Installing the Mounting Plate

To install the mounting plate:

1. Locate the wall studs.
2. If necessary, secure a ¾" fire-rated plywood[3] panel or other appropriate additional support panel to the wall studs. The additional support panel must span at least three wall studs.

Note: To secure the additional support panel to the wall, use hardware sized to support a minimum of 500 lbs. (Hardware not included.)

3. Using a level, secure the first mounting bracket to the wall. Verify that the mounting plate is centered on the wall studs, as shown in *Figure 14*. Use recommended anchoring hardware to secure the plate, see *Table 1*.

[2] Fire rated (treated fire resistant plywood can only be used in regions where natonal and local building code allow the use of such materials. Use similar alternative building materials where the building codes do not allow for fire rated wood products for electrical installations.

[3] Fire rated (treated fire resistant plywood can only be used in regions where natonal and local building code allow the use of such materials. Use similar alternative building materials where the building codes do not allow for fire rated wood products for electrical installations.

Figure 14 Mounting plate centered on wall studs

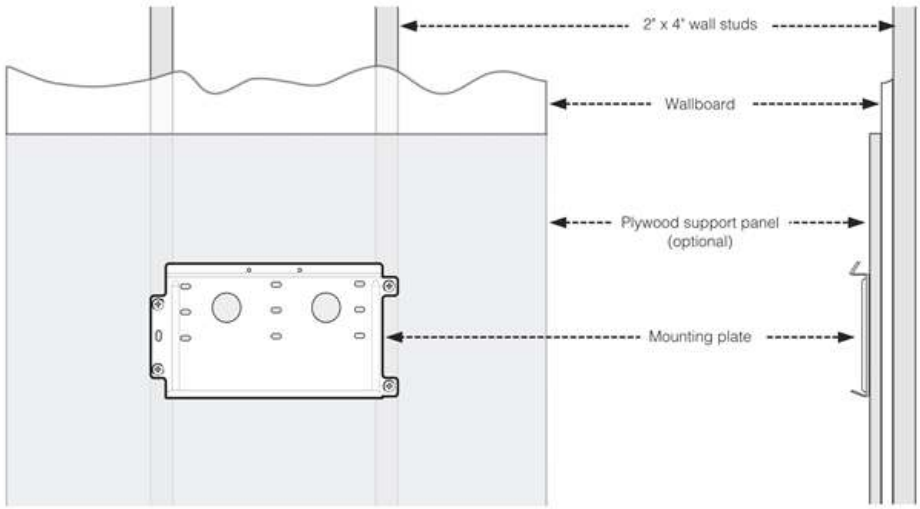

Installation tip

If you install the bottom of the mounting plate at 60" from floor, the inverter information panel will be approximately 65" from the floor.

4. Install additional mounting plates adjacent to each other as needed.

Note: The mounting plates are designed to interlock, as shown in the figure below, so that multiple plates can be installed without additional measuring or leveling.

Figure 15 Two interlocking mounting plates

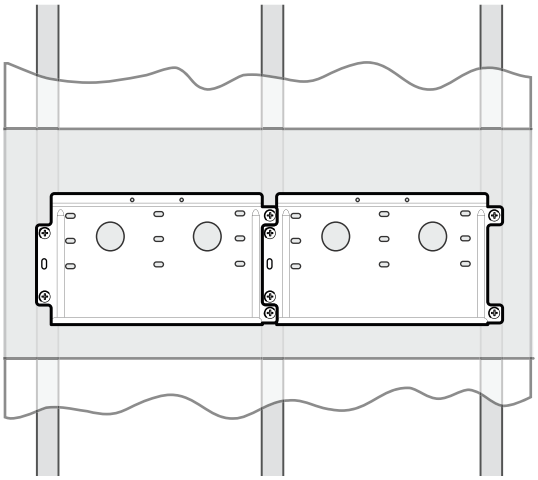

Wall-Mounting the XW Pro and PDP

To wall-mount the XW Pro Inverter/Charger:

1. Align the flange on the back of the XW Pro chassis with the bottom edge of the mounting plate, as shown in *Figure 16* .

Figure 16 Wall-mounting the XW Pro

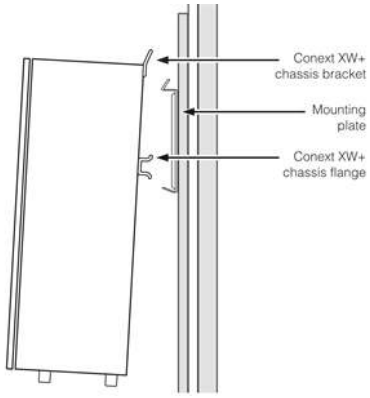

⚠ WARNING

HEAVY EQUIPMENT

The XW Pro weighs approximately 120 lbs. A two-person lift is required. To prevent personal injury, always use proper lifting techniques during installation.

Failure to follow these instructions can result in death, serious injury, or equipment damage.

2. Lower the XW Pro chassis flange onto the mounting plate.
3. Secure the bracket at the top of the XW Pro chassis with two #10 self-tapping screws (included).
4. Wall-mount the PDP and any additional XW Pros using this same procedure.

Installation tip

The PDP is designed to mount on the right side of the inverter/charger, but it can be configured to mount on the left side instead. For more information, see the *Power Distribution Panel (PDP) Installation Guide.*

Installing the XW Conduit Box

The Conduit Box is divided into two parts: the rear panel and the front panel.

To secure the Conduit Box to the XW Pro chassis:

1. Remove both #10 screws from the bottom of the XW Pro chassis.
2. Find the keyhole slots located under the top of the rear panel.
3. Align the keyhole slots on the top panel of the Conduit Box with the corresponding #10 screws on the bottom of the inverter.

Figure 17 Conduit Box keyhole alignment

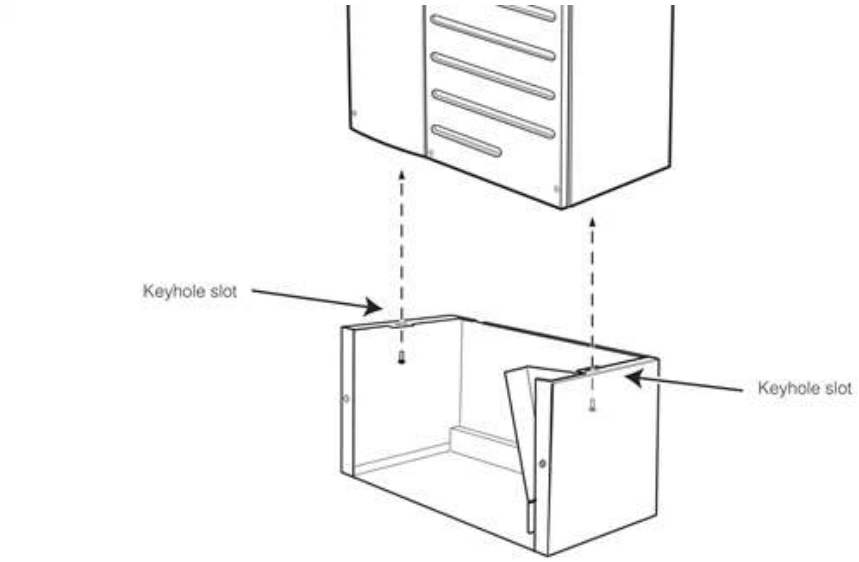

4. Secure the Conduit Box to the inverter with the both #10 screws.
5. Using two screws (not included), secure the bracket at the bottom edge of the rear panel to the wall. See *Figure 18* .

Figure 18 Wall-mounting the Conduit Box

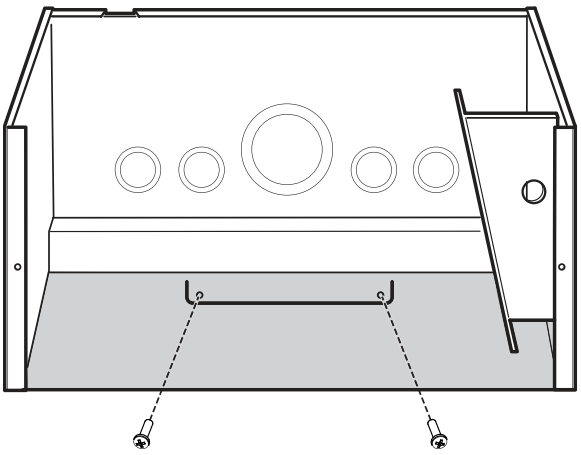

Installation tip

Do not secure the front panel of the Conduit Box until you have completed all wiring.

To secure the front panel of the Conduit Box:

1. Slide the bottom lip of the front panel over the lower edge of the rear panel.
2. Align the two holes in the front panel with the two holes in the back panel.
3. Using two #10-32 screws (included), secure the front panel to the rear panel.

Figure 19 Conduit Box installation

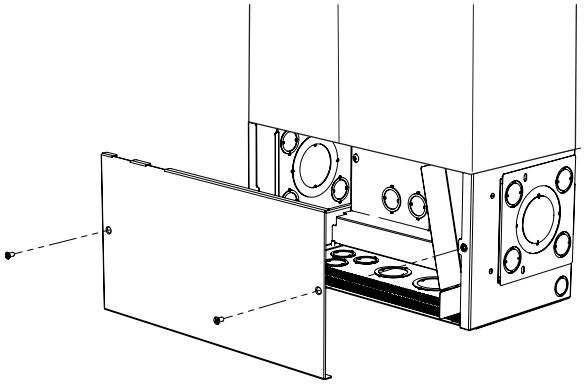

Communications Network Preparation

⚠ WARNING

XANBUS SHOCK HAZARD

Xanbus cables in contact with DC or AC power can transmit an electric shock. Do not route the Xanbus cables in the same conduit or panel as the AC and DC power cabling.

Failure to follow these instructions can result in death, serious injury, or equipment damage.

To separate the communications cables and signal cables from the DC and AC wiring, a raceway (wire barrier) has been included in the design of both the Power Distribution Panel (PDP) and the Conduit Box.

This raceway is built into the bottom of the Power Distribution Panel (PDP) and Conduit Box (see *Figure 20* , below) and is held in place by a single screw at the top of each raceway.

Figure 20 Example of raceways in a single-inverter system

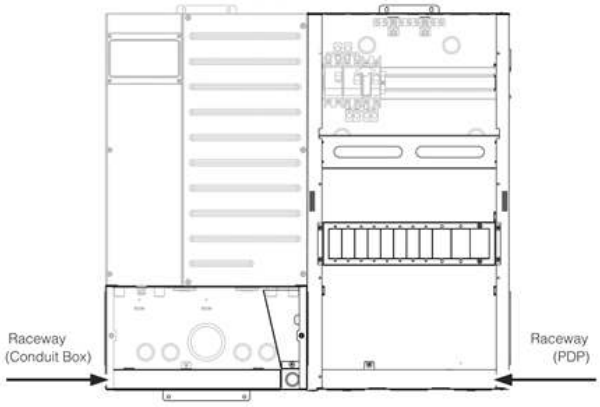

Before making AC and DC connections, route communication cables (including Battery Temperature Sensor) through the raceways. For easier identification, use a different color for each communications cable, or cable tags.

Connect communications cables to their components after AC and DC connections are made.

Battery Bank Preparation

⚠ WARNING

BATTERY TYPE AND SET UP HAZARDS

Incorrect battery configurations or settings for battery types can lead to dangerously high battery temperature, fire and explosion.

To avoid damaging your batteries during charging or equalization, and to minimize the risk of fire or explosion consult battery manufacture's documentation before setting battery parameters and follow the battery manufacturer's recommended settings.

- Always use and connect the Battery Temperature Sensor (BTS), except when an external Battery Management System (BMS) that can fulfill this function is present.
- Always verify that the configured battery type matches the battery type being used.
- Custom battery settings should be configured by qualified personnel only.
- When using Lithium-Ion batteries, ensure that the battery pack being used includes a Battery Management System (BMS) with safety controls.
- Do not use wet type Lithium-Ion batteries.

Failure to follow these instructions can result in death, serious injury, or equipment damage.

The XW Pro Inverter/Charger operates with batteries as its source of DC power. If DC power sources are connected directly to the inverter, the DC rating of the inverter can be exceeded and the inverter can be damaged.

NOTICE

OTHER SOURCES OF DC POWER

Do not connect DC power sources, such as PV arrays, wind turbines, or micro-hydro turbines, directly to the XW Pro Inverter/Charger. Connect DC power sources to a charge controller and then to the battery. DC surge protection should also be installed.

Failure to follow these instructions can result in equipment damage.

Choose Flooded, AGM, Gel, Lithium-Ion, or custom batteries for your installation.

Consider the following recommendations for battery use:

- Use only deep cycle types for inverter applications.
- Use the same battery type for all batteries in the bank.
- Use only batteries from the same lot and date in your battery bank. This information is usually printed on a label located on the battery.

Battery Bank Requirements

The DC voltage of the XW Pro must match the nominal voltage of the system and battery-connected devices. The inverter is a 48 V inverter; therefore, the battery bank and battery-connected devices in the system must be configured for 48 volts.

Note:

- The battery must be sized at a minimum to safely accept the combined charge current from all sources in the system, and the discharge current of all connected loads. Consult the manufacturer for the recommended charge/discharge limits of the selected battery. The `Maximum Charge Rate` of the XW Pro must also be configured if the recommended charge current is less than the XW Pro ratings. Refer to the XW Pro Owner's Guide (document number 990-91227) for information on this setting.
- It is generally recommended to use battery banks sized 200 Ah or greater for Li-ion chemistry or 400 Ah or greater for lead acid chemistry. Check with your Schneider Electric application engineer to review system designs with smaller batteries. The performance of some features including grid support may be limited with smaller batteries.
- The XW Pro is designed to operate with batteries and should not be operated without them.
- Do not allow the battery bank to become completely discharged. If the voltage of the battery bank falls below 40 volts, the XW Pro will not operate.

Battery Cable Requirements

⚠ WARNING

OVERHEATING OF DC TERMINALS AND CABLES

Overheating of the DC terminals or DC cables to dangerous temperatures may occur due to improper installation.

- Do not put anything between the cable lug and the terminal surface.
- Do not over-tighten connections; observe all recommended torque values.
- Do not apply anti-oxidant paste that is not rated for electrical connections.
- Do not under size cables; install cables sized in accordance with national electrical code requirements.
- DC cables must have crimped copper compression lugs or crimped and soldered copper compression lugs; soldered connections alone are not acceptable. Lugs must be rated for use with fine-stranded cable.
- Do not use coarse-stranded cable; the lack of flexibility may pull DC terminal connections loose.

Failure to follow these instructions can result in death, serious injury, or equipment damage.

Battery cable length

Cable runs should be kept as short as practical. Length should not exceed 10 feet. Run the positive and negative cables alongside each other. Avoid cable loops.

In order to keep the battery cable length short, install the XW Pro as close as possible to the battery room or battery enclosure.

Note: For best system performance, ensure that positive and negative battery cables are installed in close proximity to each other. UL listed angle type lugs may be vertically stacked when paralleling battery cables

Overcurrent protection

The installer must ensure that appropriate protection coordination of DC wiring and inverter from over-current is in place.

⚠ WARNING

DC OVERCURRENT WIRING PROTECTION

The NEC/CEC requires both DC over current protection and a DC disconnect switch for residential and commercial electrical systems. Fuses and disconnects must be sized to protect the wiring in the system and are required to open before the wire reaches its maximum current carrying capability.

Failure to follow these instructions can result in death, serious injury, or equipment damage.

⚠ WARNING

DC SHORT CIRCUIT INVERTER PROTECTION

When the inverter is installed with a PDP, the integrated DC breaker is rated for 10 kA DC short circuit. If the inverter is installed with DC equipment (batteries, charge controllers) having aggregate DC short circuit contribution capability greater than 10 kA, XW Pro inverters and DC breakers must be protected by current-limiting fuses. Example fuses with ratings and part numbers are included in *Table 4*.

Failure to follow these instructions can result in death, serious injury, or equipment damage.

Terminal covers

Color-coded snap-on DC terminal covers are included to avoid accidental contact with the terminals. Terminal covers are required for all installations, even if a Conduit Box is used. It is also recommended that the shank of the ring terminals (cable lugs) be covered with heat shrink or some other form of insulation.

Note: The NEC/CEC requires both overcurrent protection and a disconnect switch for residential and commercial electrical systems. These items are not supplied as part of the inverter, but are included with the Power Distribution Panel (PDP).

The continuous rating of current-limiting fuses is higher (400 A) than other means of DC over-current protections (250 A) to withstand the DC inrush current when connecting the batteries to the XW Pro DC port. Current limiting fuses are meant to protect equipment and conventional fuses/DC breakers are meant to protect the wires.

Table 2 Recommended Battery Cable Size Versus Length

Inverter Model	Up to 10 Feet (3 m) (90°C wire)
XW Pro 6848 NA	#4/0 AWG (120 mm^2)

Table 3 Battery Cable (in Conduit) to Maximum Breaker/Fuse Size

Cable Size Required	Maximum Breaker/Fuse Size
#4/0 (0000) AWG (120 mm^2)	250 amps

Table 4 Recommended current-limiting fuses and ratings

Fuse part number	Continuous rating	Maximum SC interrupt rating
L17T400	400 A	100 kA
L50QS400	400 A	50 kA
A15QS400	400 A	100 kA
A30QS400	400 A	100 kA

Torque Values

NOTE: Wiring terminals are suitable for connecting either copper or aluminum conductors, or both.

Torque Values for the XW Pro

Table 5 Torque Values for AC Wiring (AC Terminals and Ground Bar)

Wire Size		Torque Value	
AWG	mm^2	In-lb	N-m
14–10	1.63–2.59	35	4.0
8	3.26	40	4.5
6–4	4.11–5.19	45	5.1

Table 6 Torque Values for the Chassis Ground Lug

Wire Size		Torque Value	
AWG	mm^2	In-lbs	N-m
6–4	4.11–5.19	45	5.1
3–2	5.83–6.54	50	5.6

Table 7 Torque Values for the Inverter Battery Terminals

Torque Value	
Ft-lbs	N-m
15	20.4

Torque Values for the Power Distribution Panel (PDP)

Table 8 Torque Values for AC Disconnects and AC Breakers

Wire Size		Torque Value	
AWG	mm^2	In-lb	N-m
16–10	1.29–2.59	45	5.1
8	3.26	45	5.1
6–4	4.11–5.19	45	5.1

Table 9 Torque Values for the Ground Bus, AC Neutral Bus, DC Negative Bus, and DC Positive Bus in the PDP

Wire Size		Torque Value	
AWG	mm^2	In-lbs	N-m
14–10	1.63–2.59	35	4.0
8	3.26	40	4.5
6–4	4.11–5.19	45	5.1

3–2/0	5.83–9.27	50	5.6

Table 10 Torque Values for the Power Distribution Jumpers in the PDP

Wire Size		Torque Value	
AWG	mm^2	In-lbs	N-m
14–10	1.63–2.59	35	4.0
8	3.26	40	4.5
6–4	4.11–5.19	45	5.1
3–2/0	5.83–9.27	50	5.6

Table 11 Torque Values for the Battery Cables to each DC Bus in the PDP

Torque Value	
Ft-lbs	N-m
15	20.4

3 Wiring

What's in This Chapter?

Removing the AC Access Panel and PDP Internal Faceplates ***46***
Removing AC Access Panel *46*
Removing Power Distribution Panel Internal Faceplate *47*
Communication Ports and BTS Port ***49***
AUX Port *49*
Wiring the XW Pro with a PDP ***52***
Grounding the XW Pro Inverter/Charger *52*
Grounding the DC System *52*
Installing the Battery Temperature Sensor *53*
Making DC Connections *55*
Making AC Connections *59*
AC System Bonding *62*
AC Wiring with XW Pro Power Distribution Panel *63*
Basic Functional Test – Single Inverter ***70***
Confirming All Connections *70*
Applying DC Power to the Inverter *71*
Preparing for Functional Tests ***72***
Upgrading the Firmware *72*
Managing Compliance Regions *73*
Enabling the Inverter *74*
Checking AC Voltage *77*
Confirming Battery Charger Operation *77*
Wiring Additional XW Pro units with a PDP ***79***
Pre-Installation Steps *79*
Grounding XW Pro Inverter/Charger *81*
Installing a Dual Inverter/Charger System *81*
Installing Bypass Interlock Plate *86*
Installing a Triple Inverter/Charger System *86*
Basic Functional Test - Multiple Inverters ***92***
Wiring a Balanced Three-Phase System ***94***
Pre-Installation Steps *94*
XW Pro Inverter/Charger Grounding *95*

DC Wiring for a Three-Phase System *96*
Bypass Interlock Plate Installation (Three-Phase) *102*
Wiring the XW Pro Inverter/Charger without a PDP ***102***
Pre-Installation Steps *103*
Feed-in Protection Requirements *104*
XW Pro Inverter/Charger Grounding *104*
Grounding the DC System *105*

Removing the AC Access Panel and PDP Internal Faceplates

Removing AC Access Panel

DANGER

HAZARD OF ELECTRIC SHOCK, EXPLOSION, ARC FLASH, AND FIRE

- Apply appropriate personal protective equipment (PPE) and follow safe electrical work practices. See NFPA 70E or CSA Z462.
- This equipment must only be installed and serviced by qualified electrical personnel.
- Never operate energized with covers removed
- Energized from multiple sources. Before removing covers identify all sources, de-energize, lock-out, and tag-out and wait 5 minutes for circuits to discharge
- Always use a properly rated voltage sensing device to confirm all circuits are de-energized.

Failure to follow these instructions will result in death or serious injury.

DANGER

HAZARD OF ELECTRIC SHOCK, EXPLOSION, ARC FLASH, AND FIRE

- Remove watches, rings, or other metal objects.
- This equipment must only be installed and serviced by qualified electrical personnel.
- Keep sparks and flames away from the batteries.
- Use tools with insulated handles.
- Wear protective glasses, gloves and boots.
- Do not lay tools or other metal parts on top of batteries.

Failure to follow these instructions will result in death or serious injury.

DANGER

HAZARD OF ELECTRIC SHOCK, EXPLOSION, ARC FLASH, AND FIRE

- Battery Circuit Breakers must be installed according to the specifications and requirements defined by Schneider Electric.
- Servicing of batteries must only be performed by qualified personnel knowledgeable of batteries and the required precautions. Keep unqualified personnel away from batteries.
- Disconnect the charging source prior to connecting or disconnecting battery terminals.

Failure to follow these instructions will result in death or serious injury.

To access the AC terminal block on the XW Pro for AC wiring, you will need to remove the AC access panel, located below the inverter information panel on the left side of the XW Pro chassis.

To remove the AC access panel, remove the two screws from the AC access cover and slide the cover slightly to the left and lift away from the XW Pro chassis.

Installation tip

When re-securing the AC access cover, verify that its recessed edge slips inside the edge of the front panel.

Figure 21 AC access panel removal

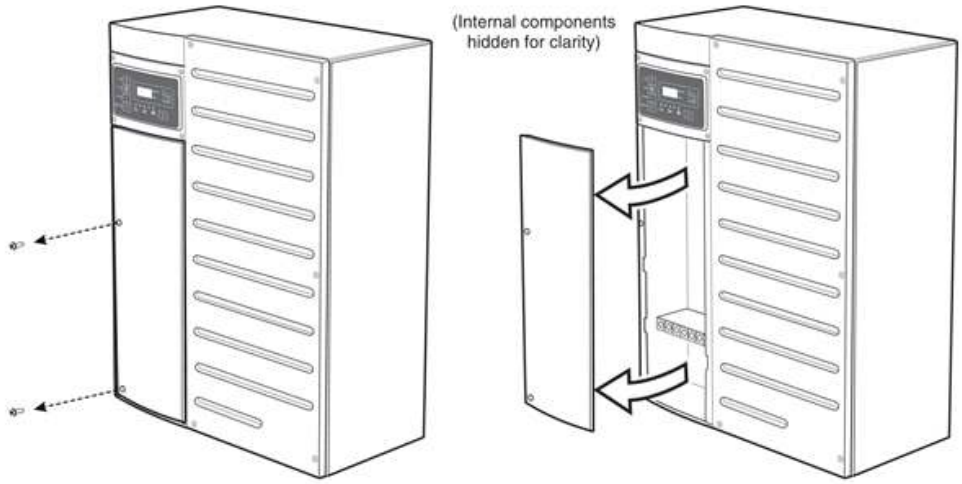

Removing Power Distribution Panel Internal Faceplate

If you are wiring the XW Pro to a Power Distribution Panel (PDP), you will need to remove the two front faceplates from the PDP.

For easier access to the faceplates, begin by removing the panel door from its hinges.

To remove the PDP door:

1. Remove the screw at the top hinge of the PDP door and remove the top section of the hinge.
2. Using your thumb or forefinger, gently pivot the hinge upward as you remove the PDP door.

To remove the PDP faceplates:

1. Remove the four screws holding the upper faceplate in place.
2. Remove the four screws holding the lower faceplate in place.

Figure 22 Power Distribution Panel (PDP) faceplate removal

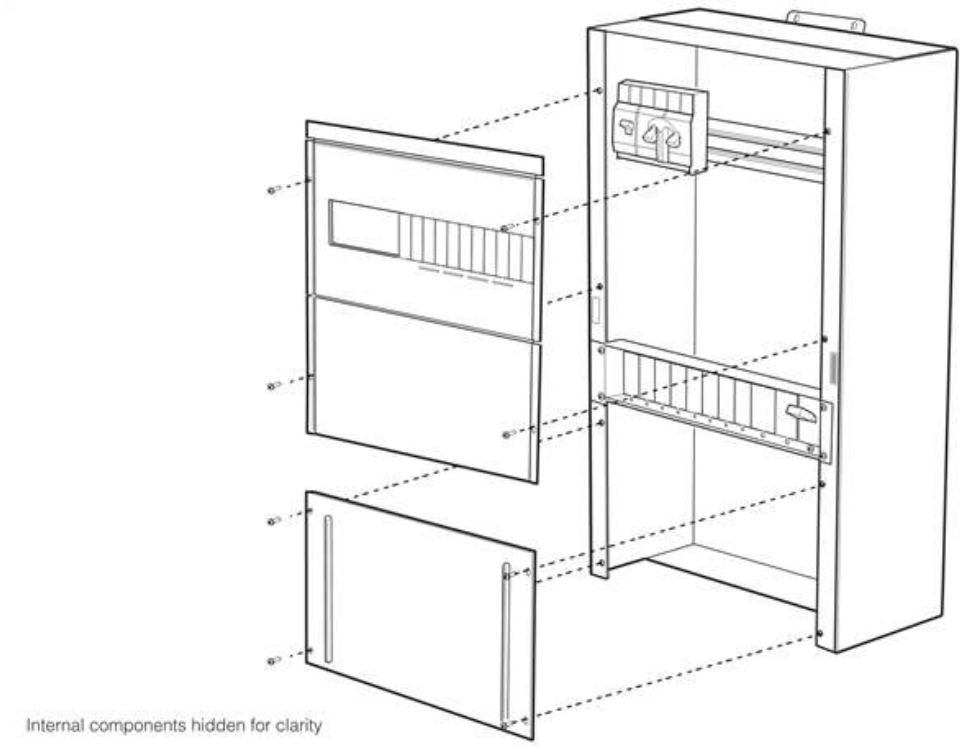

Communication Ports and BTS Port

Figure 23 XW Pro communication ports

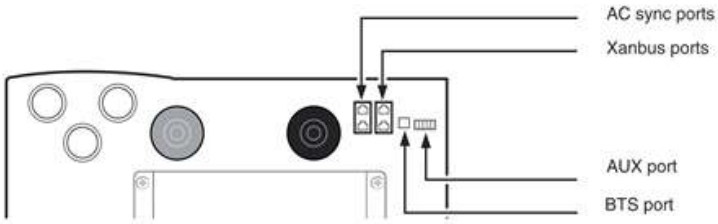

There are five communication ports and a Battery Temperature Sensor (BTS) port located on the bottom of the XW Pro chassis (as shown above in *Removing the AC Access Panel and PDP Internal Faceplates*):

- Two Power Distribution Panel (without AC Breakers) Xanbus ports for making network connections between inverters, charge controllers, and accessories. For more information, see *"The Xanbus Network" on page 113*.
- Two AC sync ports to connect multiple XW Pros in parallel. For installation instructions, see *The Xanbus Network on page 113*.
- AUX port: 12 VDC/250 mA output to control a relay, fan, indicator light, or other device, using a Conext Gateway. For more information, see *Removing the AC Access Panel and PDP Internal Faceplates on page 46*.
- Battery Temperature Sensor (BTS) port: For more information, see *Removing the AC Access Panel and PDP Internal Faceplates on page 46*.

AUX Port

The XW Pro has a 12 VDC auxiliary (AUX) output that can be configured to trigger in response to one of the following conditions:

- low battery voltage
- high battery voltage
- low battery temperature
- high battery temperature
- charge bulk exit
- faults
- charge absorption exit
- heatsink temperature
- TOD (time of day)
- SOC (state of charge)

The auxiliary output can also be triggered manually using a Conext Gateway.

Note: The AUX port is connected via an AUX port connector, included with the XW Pro.

The 12 VDC output can be used to trigger an HBX (Hi Battery Transfer) relay to disconnect from the Grid.

The auxiliary output is also designed to provide the following functions:

- Auxiliary 12 VDC power supply. See AUX+12V Voltage Supply, below.
- Remote Power Off. See AUX-RPO: User Remote Power OFF (RPO), below.

Figure 24 AUX Port Location

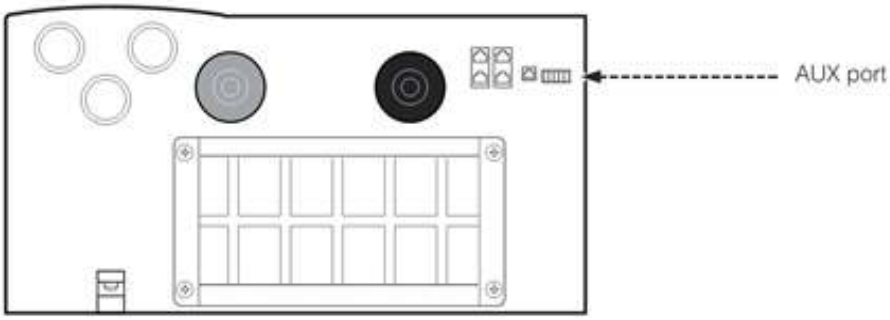

AUX+12V Voltage Supply

DC voltage is available between JU-1 (AUX +12 V) and JU-3 (AUX-COM, signal return). The power available at these terminals is 12 VDC and maximum current is 250 mA (3 watts).

AUX+12 V and AUX-COM terminals can be used to power a relay (maximum 3 watts).

Note: Additional fuses may be necessary for some installations.

AUX +12 V voltage supply can be programmed for different tasks ON and OFF using the Conext Gateway.

Default status of AUX+12 V is OFF.

AUX-RPO: User Remote Power OFF (RPO)

Connecting JU-2 (AUX-RPO) and JU-3 (AUX-COM) terminals together through an external switch (normally open contact) will provide the system shut off function if the switch is closed. The external switch, if pressed, overrides the control provided from the front panel.

To enable the AUX port remote power off function, enable the Remote Power Off setting from the Conext Gateway. For more information, see the Owner's Guide. If the external switch is cleared (not pressed), the inverter can be enabled back from the front panel.
NOTE: The Conext MPPT60 or MPPT80 will require a power cycle to recover.

Select an external switch with normally open contact; consult your local system designer or qualified technician for specific installation instructions.

User Line Wiring

Use twisted pairs of #24 AWG to #12 AWG for connections. Carefully route the wires away from high power load cables to minimize noise effects on signal integrity.

AUX Port Terminal Assignments

Table 12 User Connector Terminals and Functions

Pin	Reference	Name	Function
JU-1	AUX+12V	+12 V User Voltage Supply	+12 VDC Voltage source: 250 mA maximum
JU-2	AUX-RPO	Remote Power Off	Remote Power Off Logic Level: Active Low. Activating this signal shuts down system operation
JU-3	AUX-COM	Common Ground Reference	Return Common Ground Reference for 12 V, Remote Power Off signals
JU-4	EXT_TS_OUT	External Transfer switch: Output signal	Open collector type drive circuit (30V/0.5A max)
JU-5	EXT_TS_IN	External Transfer switch: Input signal	External Transfer switch: Low signal range:(0-5V) High signal range:10-28V with the consumption of 8mA@12V and 10mA@24V

Wiring the XW Pro with a PDP

NOTICE

OVERLOADING THE DISTRIBUTION PANEL

The amount of power that can be fed into a distribution panel and the means and location for feed-in, must be in accordance with NEC Handbook 2017, article 230 or the current requirements of the local electrical code.

Failure to follow these instructions can result in equipment damage.

This section provides instructions for making AC and DC connections between the XW Pro Inverter/Charger and an Power Distribution Panel (PDP), using a Conduit Box and the pre-installed cables in the PDP.

To install a XW Pro without the Conduit Box or PDP, see *Wiring the XW Pro Inverter/Charger without a PDP on page 102* of this Guide.

Note: If a Conduit Box is installed, run the communication and Battery Temperature Sensor cables through the raceway at the rear of the Conduit Box and PDP before making AC and DC connections. The raceways become more difficult to access after AC and DC wiring is completed. For more information, see *"Communications Network Preparation" on page 36* of this Installation Guide.

Grounding the XW Pro Inverter/Charger

⚠ WARNING

UNGROUNDED EQUIPMENT

Equipment ground terminals must be reliably connected to ground by appropriately sized grounding conductors. All installations must comply with national and local codes. Consult local and national codes for specific grounding and bonding requirements.

Failure to follow these instructions can result in death, serious injury, or equipment damage.

The XW Pro is provided with ground terminals that must be reliably connected to ground (protective earth) by appropriately sized equipment grounding conductors. System grounding for the AC and DC systems must be done according to all applicable NEC and local installation codes.

For more information about system grounding, see *"Grounding the DC System" below* and *"Grounding AC Equipment" on page 61*.

Grounding the DC System

To connect the XW Pro to the DC grounding system, use the ground lug at the bottom of the XW Pro chassis (see *XW Pro Features on page 18*). The terminal accepts wires from #14 AWG (1.63 mm) to #2AWG (6.54 mm).

System grounding for the DC system, which typically involves bonding (connecting) the battery negative circuit to ground, is dependent on the system configuration.

⚠ WARNING

LACK OF GROUND FAULT DETECTION HAZARD

Ground fault detection on the MPPT 60 150 solar charge controller is circumvented when the XW Pro battery negative circuit is grounded.

Failure to follow these instructions can result in death, serious injury, or equipment damage.

Note: If a grounded DC system is required, ensure that the system bonding is done in one location only, and that all conductors and connections comply with all applicable NEC and local installation codes.

Figure 25 DC Grounding Using a Power Distribution Panel (PDP)

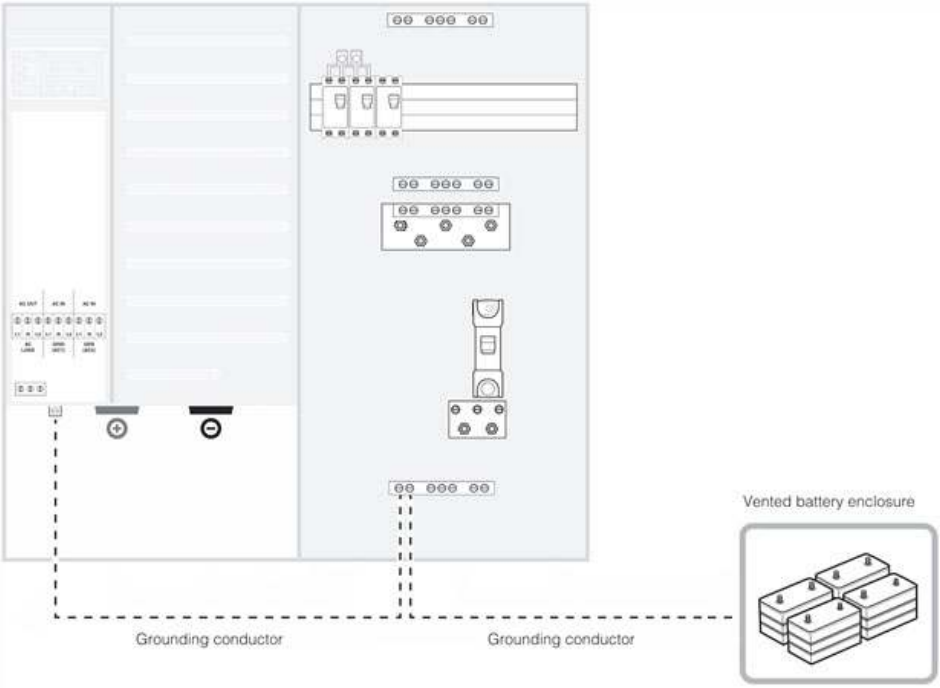

Installing the Battery Temperature Sensor

⚠ WARNING

BATTERY TEMPERATURE

- Battery temperature sensing provides necessary information for performance and safety.
- Always install and connect the Battery Temperature Sensor (BTS). Always install and connect the Battery Temperature Sensor (BTS) if an external BMS fulfilling this function is not used. See the note directly below.
- Ensure any external BMS and battery used is compatible with the Conext system.

Failure to follow these instructions can result in death, serious injury, or equipment damage.

Note: For all BTS compatible Xanbus enabled devices in the system, at least one BTS must be separately installed for each device type associated with a battery. If there is a group of the same devices forming a multi-unit setup, only one BTS is required per device type connected to the same battery (same DC association). See the installation guide of each device for BTS installation instructions.

The Battery Temperature Sensor (BTS) regulates battery charging based on battery temperature. The BTS extends battery life by minimizing overcharging in warm temperatures and undercharging in cold temperatures.

The BTS connects to the XW Pro via the BTS port, which is located at the bottom of the XW Pro chassis, next to the communication ports.

Note: Connect the BTS to the batteries only after the battery bank has been prepared and is ready to connect to the inverter.

To install the Battery Temperature Sensor:

1. Route the BTS cable through your preferred conduit route and insert the BTS jack into the BTS port.
2. Route the BTS cable to the battery enclosure, and then connect the BTS using one of the following methods (as shown in *Figure 26*):
3. Connect the BTS ring terminal directly to a battery terminal (recommended), or:
4. Attach the BTS to any side of the battery you wish to monitor by using the adhesive backing on the BTS.

Note: When using the adhesive backing, install the BTS on the side of the battery below the electrolyte level.

Installation tip

Place the sensor between batteries and place the batteries in an insulated box to reduce the influence of the ambient temperature outside the battery enclosure.

Figure 26 Battery Temperature Sensor Installation

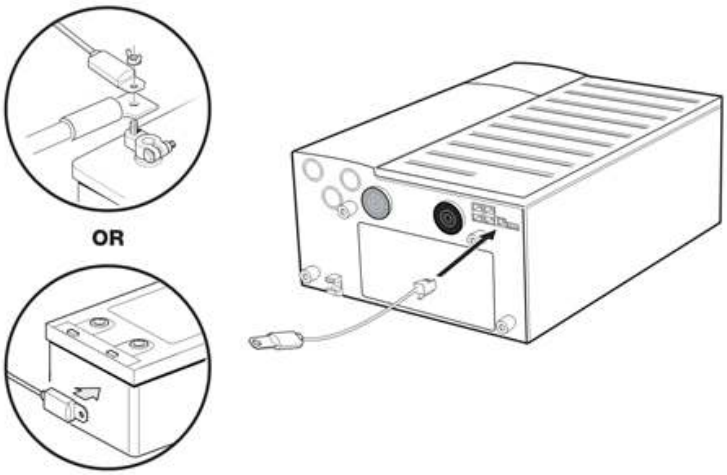

Making DC Connections

Connecting Battery Cables

DANGER

HAZARD OF ELECTRIC SHOCK, EXPLOSION, ARC FLASH, AND FIRE

- Apply appropriate personal protective equipment (PPE) and follow safe electrical work practices. See NFPA 70E or CSA Z462.
- This equipment must only be installed and serviced by qualified electrical personnel.
- Never operate energized with covers removed
- Energized from multiple sources. Before removing covers identify all sources, de-energize, lock-out, and tag-out and wait 5 minutes for circuits to discharge
- Always use a properly rated voltage sensing device to confirm all circuits are de-energized.

Failure to follow these instructions will result in death or serious injury.

DANGER

HAZARD OF ELECTRIC SHOCK, EXPLOSION, ARC FLASH, AND FIRE

- Remove watches, rings, or other metal objects.
- This equipment must only be installed and serviced by qualified electrical personnel.
- Keep sparks and flames away from the batteries.
- Use tools with insulated handles.
- Wear protective glasses, gloves and boots.
- Do not lay tools or other metal parts on top of batteries.

Failure to follow these instructions will result in death or serious injury.

DANGER

HAZARD OF ELECTRIC SHOCK, EXPLOSION, ARC FLASH, AND FIRE

- Battery Circuit Breakers must be installed according to the specifications and requirements defined by Schneider Electric.
- Servicing of batteries must only be performed by qualified personnel knowledgeable of batteries and the required precautions. Keep unqualified personnel away from batteries.
- Disconnect the charging source prior to connecting or disconnecting battery terminals.

Failure to follow these instructions will result in death or serious injury.

⚠ WARNING

OVERHEATING OF DC TERMINALS AND CABLES

Overheating of the DC terminals or DC cables to dangerous temperatures may occur due to improper installation.

- Do not put anything between the cable lug and the terminal surface.
- Do not over-tighten connections; observe all recommended torque values.
- Do not apply any type of anti-oxidant paste until after the cable connection is tightened.
- Do not under size cables; install cables sized in accordance with national electrical code requirements.
- DC cables must have crimped copper compression lugs or crimped and soldered copper compression lugs; soldered connections alone are not acceptable. Lugs must be rated for use with fine-stranded cable.
- Do not use coarse-stranded cable; the lack of flexibility may pull DC terminal connections loose.

Failure to follow these instructions can result in death, serious injury, or equipment damage.

NOTICE

DC REVERSE POLARITY

Before making the final DC connection or closing the DC breaker or disconnect, check cable polarity at both the battery and the inverter/charger. Positive (+) must be connected to positive (+). Negative (–) must be connected to negative (–).

Failure to follow these instructions can result in equipment damage.

Battery cables are not included in the XW Pro package. Depending on your installation requirements, you will need to supply at least one pair of battery cables. For battery cable requirements, see *"Battery Cable Requirements" on page 38*.

Note: One pair of #4/0 AWG Arctic Ultraflex Blue™ battery cables is included with each Power Distribution Panel (PDP) and Connection Kit for INV2 INV3 PDP. For more information, see *"Optional Accessories" on page 18*.

Figure 27 Battery Terminals (bottom of XW Pro)

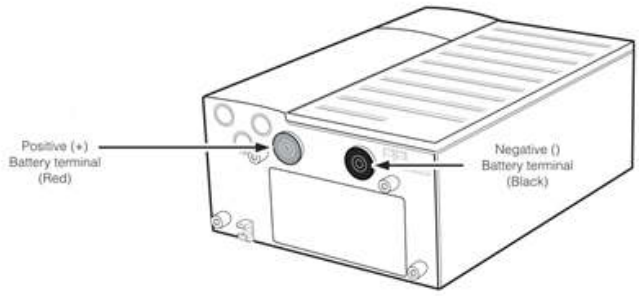

To connect the Power Distribution Panel (PDP) to the XW Pro:

1. Connect the positive battery cable (pre-installed in the PDP) to the positive battery terminal at the bottom of the XW Pro, as shown in *Figure 27* .
2. Connect the negative battery cable (pre-installed in the PDP) to the negative battery terminal at the bottom of the XW Pro.

Note: When making the connections, be sure to observe correct hardware stacking and proper polarity, and ensure that nothing obstructs the connection between the terminal surface and the battery cable lug, see *Figure 28* .

Figure 28 Battery Cable Connection

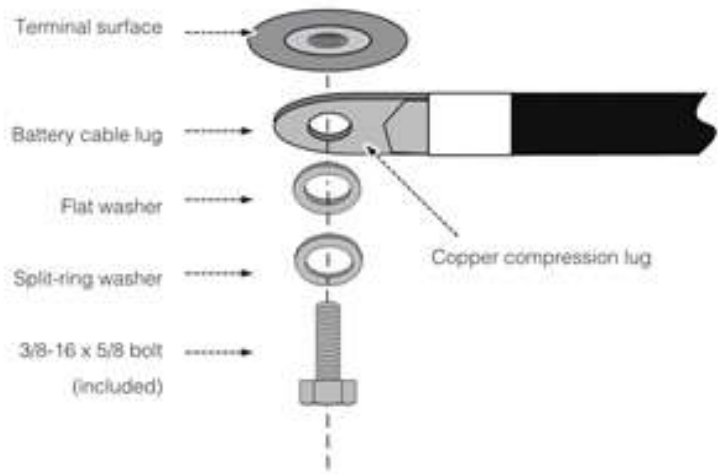

3. Attach the DC terminal covers (included with the XW Pro) to the bottom of the XW Pro DC terminals.

To connect the PDP to the Battery Bank:

Connect your battery cables (not included) to the PDP. Connect the negative battery cable to the DC Negative Bus, and the positive battery cable to the input end of the GJ250A 160 VDC, 3/8" stud DC breaker (pre-installed in the PDP), as shown in *Figure 29*.

Note: To properly attach and torque the positive cable to the DC breaker, you may need to temporarily remove the breaker from the rail.

Route your battery cables from the PDP, through your preferred conduit path, to the battery location. Do not connect the cables to the battery yet.

Note: Before connecting the DC cables from the PDP to the battery, perform the procedures in *"Making AC Connections" on page 59*.

Figure 29 DC Connections to a Single Inverter Using a PDP

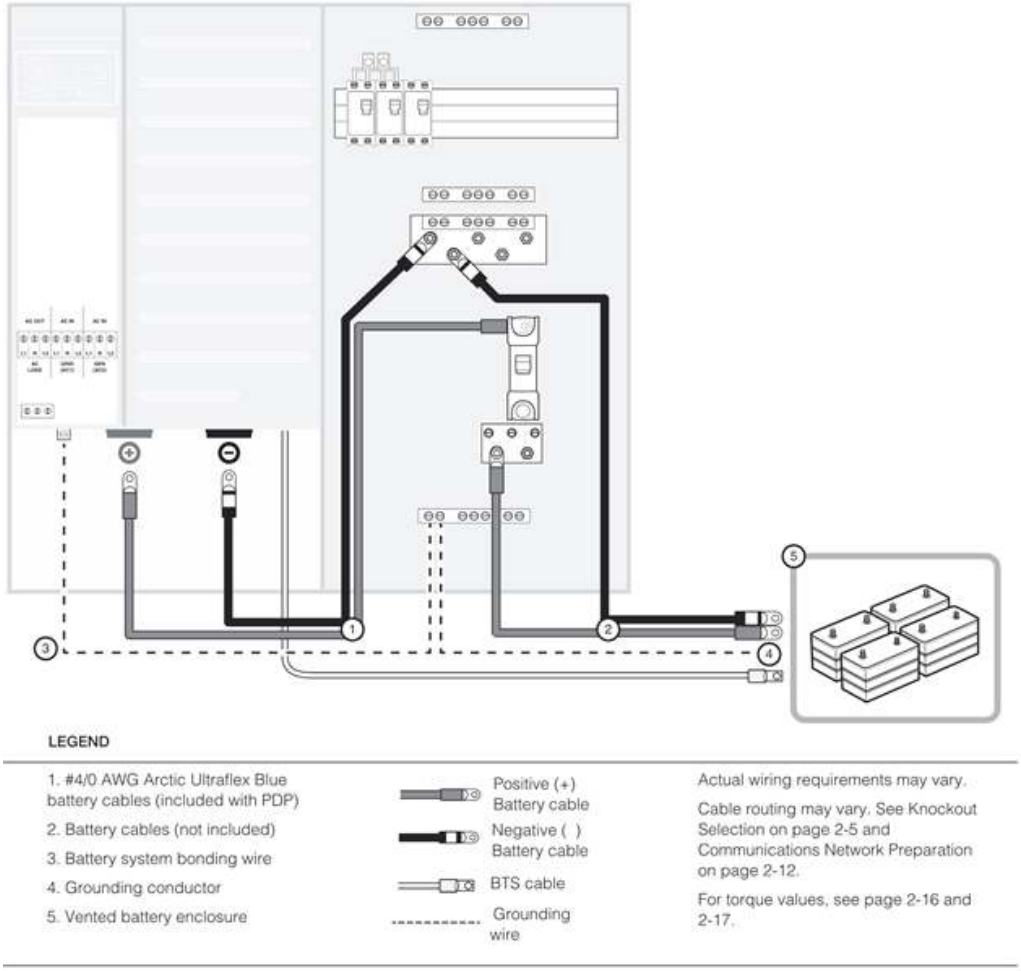

Making AC Connections

This section provides instructions for making AC connections between the XW Pro and the Power Distribution Panel (PDP) (using the pre-installed AC cables in the PDP) and between the PDP and your inverter load sub-panel.

Note: Install an inverter load sub-panel and AC conduit before completing your XW Pro installation. For more information, see *"AC Wiring to the Inverter Load Sub-Panel" on page 67*.

Note: If multiple XW Pro's are planned, refer to the XW Pro Multi-unit Design Guide (990-91373) as there are additional considerations that impact equipment and wiring requirements.

Note: Do not use a GFCI equipped AC source to power either the Grid (AC1) or Generator (AC2) inputs. The AC input filters on the XW Promay cause nuisance tripping of ground fault protected outputs.

NOTICE

BACK FED AC POWER

Back fed AC Power can damage equipment. Do not wire the inverter's AC output port directly to the utility line or generator output.

Failure to follow these instructions can result in equipment damage.

Note: Wiring the inverter's AC output to the utility or generator output will cause severe damage to the inverter which is not covered under warranty.

AC Terminal Block

⚠ ⚠ DANGER

HAZARD OF ELECTRIC SHOCK, EXPLOSION, ARC FLASH, AND FIRE

- Apply appropriate personal protective equipment (PPE) and follow safe electrical work practices. See NFPA 70E or CSA Z462.
- This equipment must only be installed and serviced by qualified electrical personnel.
- Never operate energized with covers removed
- Energized from multiple sources. Before removing covers identify all sources, de-energize, lock-out, and tag-out and wait 5 minutes for circuits to discharge
- Always use a properly rated voltage sensing device to confirm all circuits are de-energized.

Failure to follow these instructions will result in death or serious injury.

DANGER

HAZARD OF ELECTRIC SHOCK, EXPLOSION, ARC FLASH, AND FIRE

- Remove watches, rings, or other metal objects.
- This equipment must only be installed and serviced by qualified electrical personnel.
- Keep sparks and flames away from the batteries.
- Use tools with insulated handles.
- Wear protective glasses, gloves and boots.
- Do not lay tools or other metal parts on top of batteries.

Failure to follow these instructions will result in death or serious injury.

DANGER

HAZARD OF ELECTRIC SHOCK, EXPLOSION, ARC FLASH, AND FIRE

- Battery Circuit Breakers must be installed according to the specifications and requirements defined by Schneider Electric.
- Servicing of batteries must only be performed by qualified personnel knowledgeable of batteries and the required precautions. Keep unqualified personnel away from batteries.
- Disconnect the charging source prior to connecting or disconnecting battery terminals.

Failure to follow these instructions will result in death or serious injury.

To access the AC terminal block, you will need to remove the AC access panel. For more information, see *"Removing the AC Access Panel and PDP Internal Faceplates" on page 46*.

The AC terminal block includes three terminals each (L1, L2, and Neutral) for AC Grid input (AC1), AC Generator input (AC2), and AC Out (AC LOAD) connections, see *Figure 30*.

Figure 30 AC Terminal Block

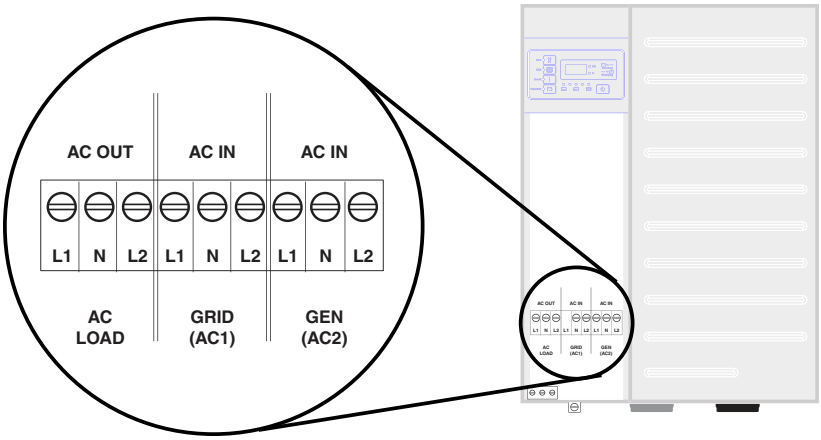

The neutral inputs are connected to each other, requiring only one neutral connection when installed with a Power Distribution Panel (PDP). Without the PDP, additional neutral connections may be required at the input sources.

Grounding AC Equipment

See *"Torque Values for the XW Pro" on page 41* for torque values for the AC terminal and AC ground bar. See*"Torque Values for the Power Distribution Panel (PDP)" on page 41* for torque requirements for the ground bar in the XW Pro Power Distribution Panel.

Figure 31 AC Equipment Grounding With the PDP

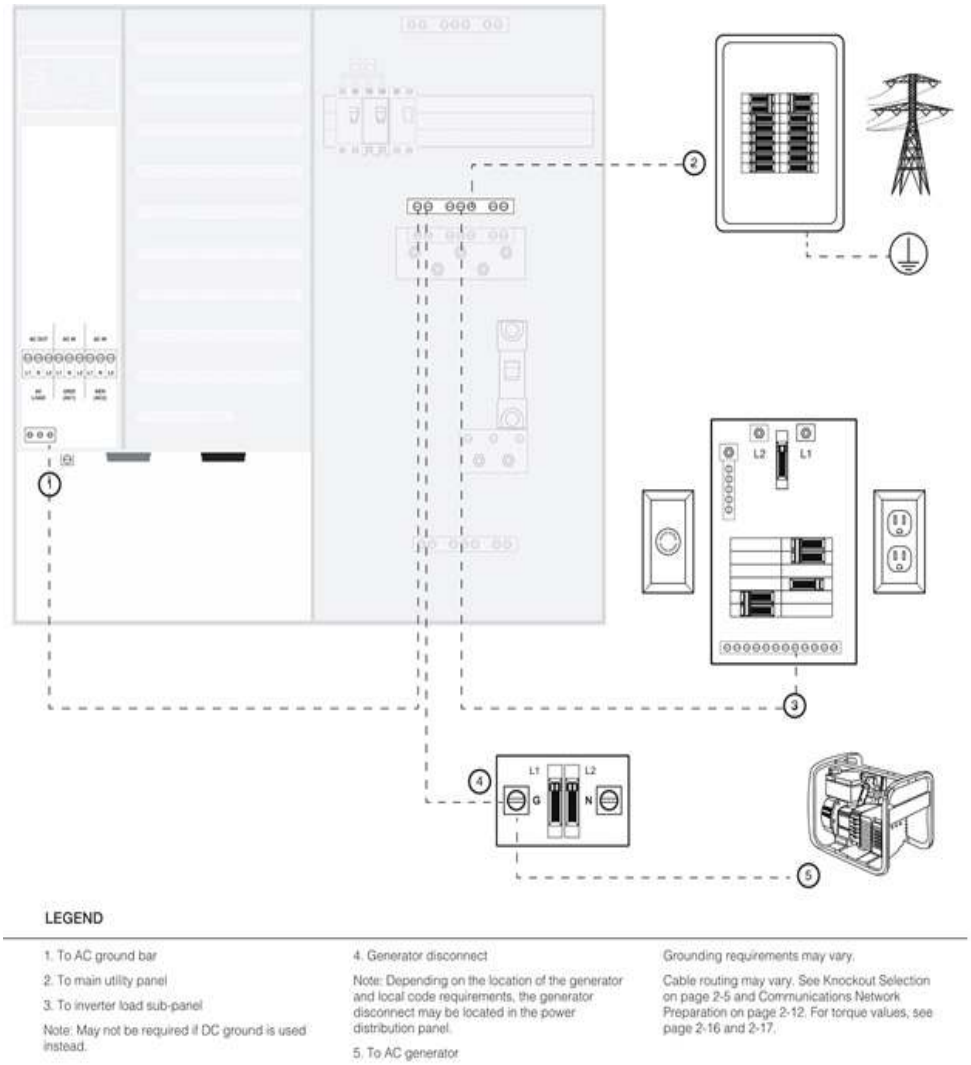

AC System Bonding

⚠ WARNING

MULTIPLE AC NEUTRAL-TO-GROUND BONDS

Verify that only one neutral-to-ground bond exists in the system. Having more than one neutral-to-ground bond in a system violates local electrical codes, may create a shock or fire hazard, and may cause some sensitive equipment to malfunction.

Failure to follow these instructions can result in death, serious injury, or equipment damage.

System bonding refers to connection (bonding) of one of the current-carrying conductors of an electrical system to ground. This creates a "grounded conductor" or "neutral" that is at ground potential, but is separate from the equipment ground conductor. System bonding must be done at only one location.Procedures for system bonding vary between on-grid and off-grid systems.

System bonding for on-grid systems

The XW Pro does not connect the neutral to ground. The AC input neutral is already bonded to ground by the incoming utility grid system. Do not connect the neutral to ground in any additional location.

The XW Pro does not switch or disconnect the AC neutral in any mode of operation, so even in invert (back-up) mode, the inverter load sub-panel neutral is bonded to ground by the utility grid system. It must not be grounded again in the inverter load sub-panel.

System bonding for off-grid systems

In a system without a generator, or with a generator that does not provide a grounded neutral, you must make the connection from neutral to ground in the inverter load sub-panel or main distribution panel, as applicable.

In a system with a generator that provides a grounded neutral, no additional connection from neutral to ground is needed. Do not connect neutral to ground in the inverter load sub-panel or main distribution panel, as applicable.

AC Wiring with XW Pro Power Distribution Panel

AC Wiring the Power Distribution Panel (PDP) to the XW Pro

To connect the Power Distribution Panel (PDP) to the XW Pro:

1. In the Power Distribution Panel (PDP), locate the wire labelled INV1 N-LOAD (SPLIT PHASE), pre-installed in the neutral bus bar N-LOAD terminal. Connect the INV1 N-LOAD (SPLIT PHASE) wire to the AC Load terminal (N-LOAD) on the XW Pro, as shown in *Figure 32 on page 64*.
2. Locate the wires labelled INV1 L1-LOAD and INV1 L2-LOAD, pre-installed in the terminals at the input (top) side of the 60 A, 120/240 VAC, two-pole, type QOU output AC breaker in the PDP. Connect the INV1 L1-LOAD and INV1 L2-LOAD wires to the AC Load terminals (L1 -LOAD and L2-LOAD, respectively) on the XW Pro.
3. Locate the wires labelled INV1 L1-GRID and INV1 L2-GRID, pre-installed in the terminals at the bottom of the output breaker in the PDP.
4. Connect the INV1 L1-GRID and INV1 L2-GRID to the XW Pro, using one of the following methods (depending on your installation):

- If the AC source will be the utility grid, connect to the GRID (AC1) terminals (L1-GRID, L2-GRID) on the XW Pro Inverter/Charger, see *Figure 32* .

Note: In an on-grid system with a generator, you will need to install an additional 60 A, 120/240 VAC, two-pole, type QOU AC breaker onto the DIN rail. For information, see *Figure 33 on page 65*.

- If the system will be off-grid and the only AC source will be a generator, connect these wires to the GEN (AC2) terminals (L1-GEN, L2-GEN) on the XW Pro Inverter/Charger.

Note: Both lines (L1 and L2) of input power must be connected in order for the XW Pro to operate. For example, L1 and L2 of Grid Input L1 and L2 of Gen Input need to be connected.

Note: Additional neutral terminals (N-GRID, N-GEN) are provided on the XW Pro for installations that do not use the Power Distribution Panel. For more information, see *Wiring the XW Pro Inverter/Charger without a PDP on page 102*.

Figure 32 Wiring the Conext Power Distribution Panel (PDP) to the XW Pro

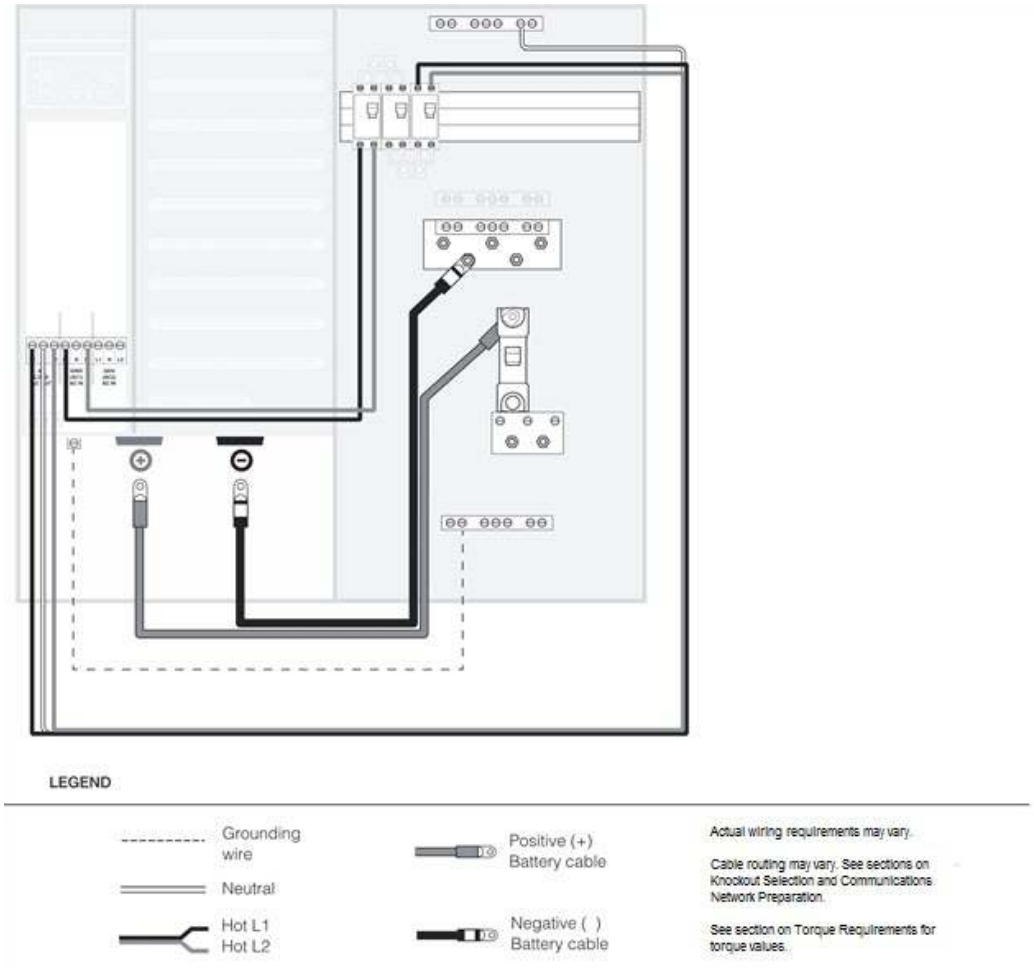

Wiring the Power Distribution Panel (PDP) to a Generator (On-Grid)

In an on-grid installation, the generator will require an additional 60 A, 120/240 VAC, two-pole, type QOU AC breaker to be installed in the Power Distribution Panel (PDP).

Figure 33 Wiring the XW Pro Power Distribution Panel to a Generator (On-Grid)

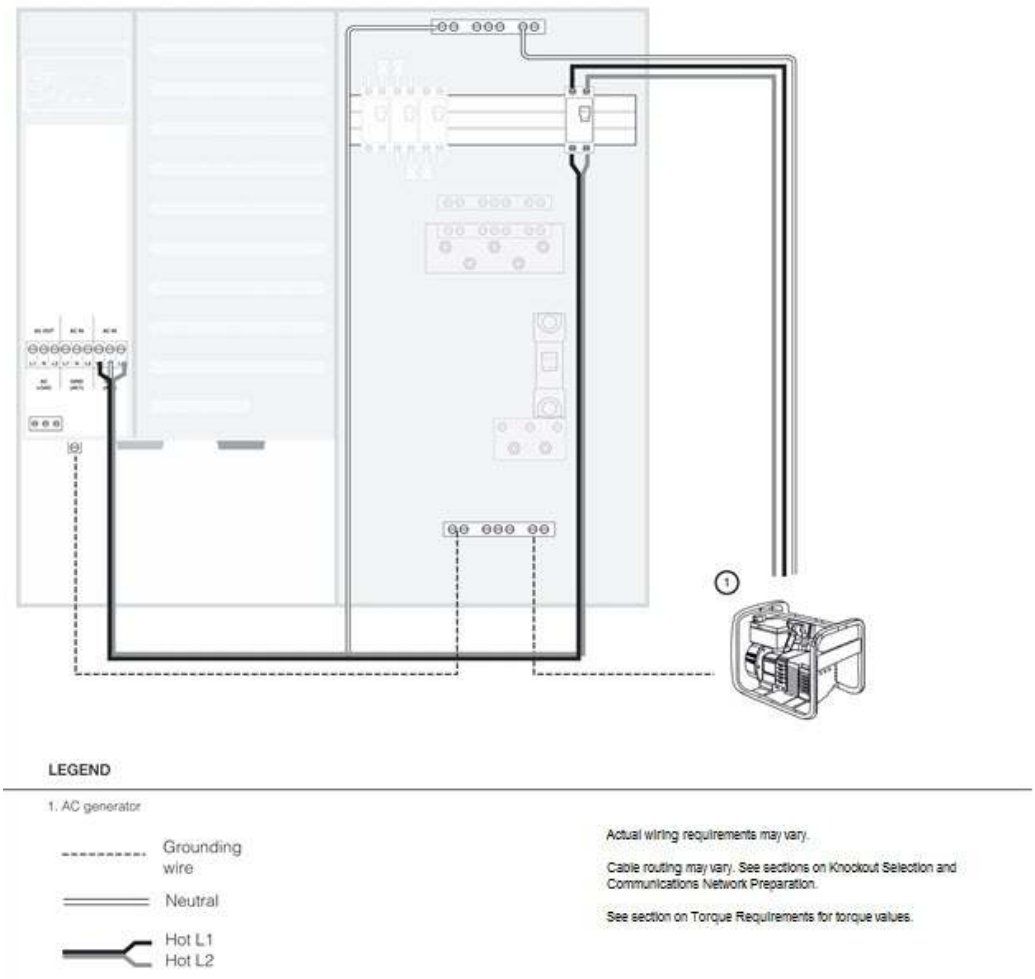

Wiring the Power Distribution Panel (PDP) to a Generator (Off-Grid)

In an off-grid installation, the generator can be connected to the breakers provided in the PDP. No additional breaker is required.

Figure 34 Wiring the PDP to a Generator (Off Grid)

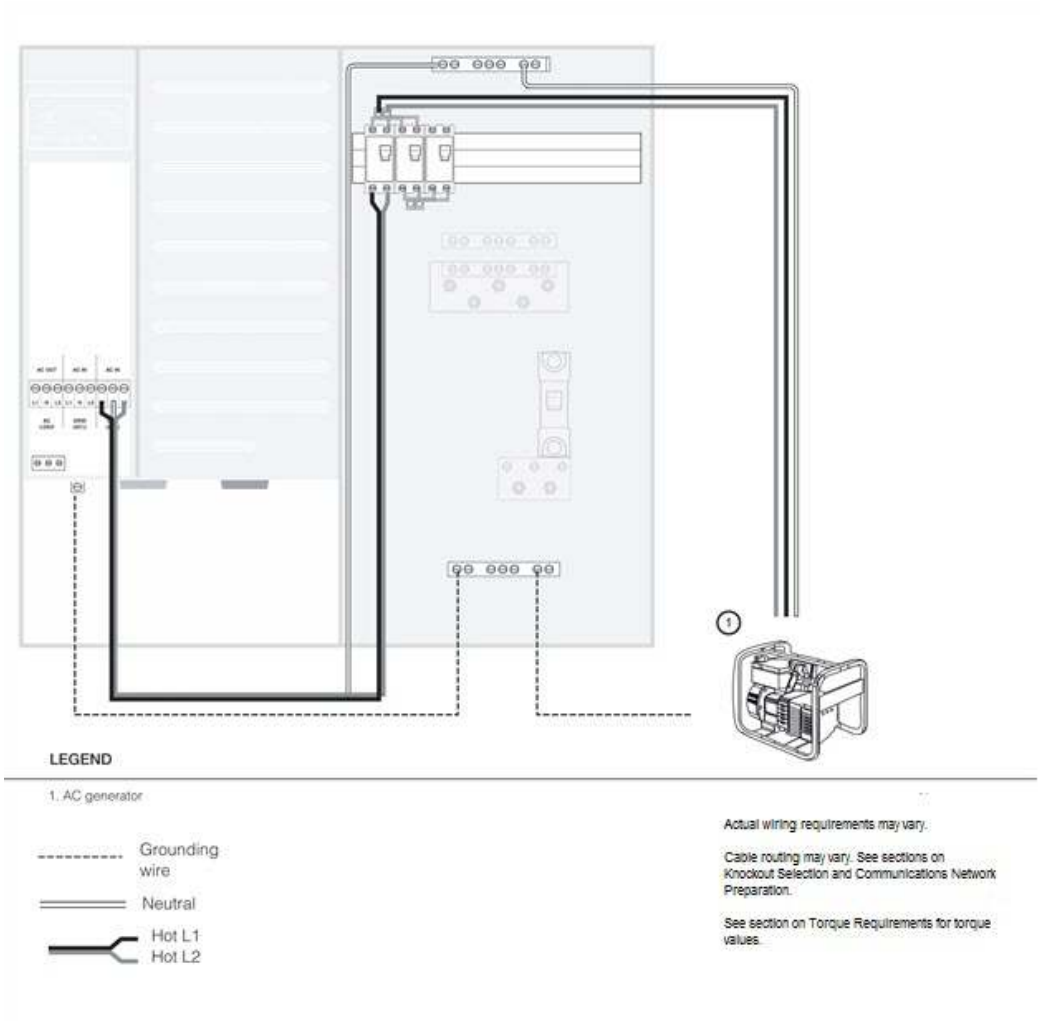

AC Wiring to the Inverter Load Sub-Panel

DANGER

HAZARD OF ELECTRIC SHOCK, EXPLOSION, ARC FLASH, AND FIRE

- Apply appropriate personal protective equipment (PPE) and follow safe electrical work practices. See NFPA 70E or CSA Z462.
- This equipment must only be installed and serviced by qualified electrical personnel.
- Never operate energized with covers removed
- Energized from multiple sources. Before removing covers identify all sources, de-energize, lock-out, and tag-out and wait 5 minutes for circuits to discharge
- Always use a properly rated voltage sensing device to confirm all circuits are de-energized.

Failure to follow these instructions will result in death or serious injury.

DANGER

HAZARD OF ELECTRIC SHOCK, EXPLOSION, ARC FLASH, AND FIRE

- Remove watches, rings, or other metal objects.
- This equipment must only be installed and serviced by qualified electrical personnel.
- Keep sparks and flames away from the batteries.
- Use tools with insulated handles.
- Wear protective glasses, gloves and boots.
- Do not lay tools or other metal parts on top of batteries.

Failure to follow these instructions will result in death or serious injury.

DANGER

HAZARD OF ELECTRIC SHOCK, EXPLOSION, ARC FLASH, AND FIRE

- Battery Circuit Breakers must be installed according to the specifications and requirements defined by Schneider Electric.
- Servicing of batteries must only be performed by qualified personnel knowledgeable of batteries and the required precautions. Keep unqualified personnel away from batteries.
- Disconnect the charging source prior to connecting or disconnecting battery terminals.

Failure to follow these instructions will result in death or serious injury.

An inverter load sub-panel and AC conduit must be installed before your XW Pro installation can be completed.

Wiring for connections between the PDP and the inverter load sub-panel is not included. Power distribution jumpers in the PDP accept up to a #2/0 AWG (9.27 mm^2) cable (maximum).

See *"Torque Values" on page 41* for torque requirements.

To install the inverter load sub-panel and AC conduit:

1. Choose a location for the inverter load sub-panel and install it according to the manufacturer's directions.
2. Install an AC conduit between the PDP and the inverter load sub-panel.
3. Determine which circuits the XW Pro will power and install the appropriate circuit breakers into the inverter load sub-panel.
4. For on-grid systems:
   a. Disconnect all power to the main AC panel (utility grid).
   b. Choose which circuits will be backed by the inverter(s), and remove their wires from the main panel.
   c. Reroute these wires to the new inverter load sub-panel.
5. Remove unused breakers from utility panel.
6. Install a 60 amp maximum (disconnect) main circuit breaker in the inverter load sub-panel.

NOTICE

BACK FED AC POWER

Back fed AC Power can damage equipment. Do not wire the inverter's AC output port directly to the utility line or generator output.

Failure to follow these instructions can result in equipment damage.

To connect the Power Distribution Panel (PDP) to the Inverter Load Sub-Panel and Utility Grid:

1. Connect L1 (from the L1 output jumper) and L2 (from the L2 output jumper), Neutral, and Ground to your inverter load sub-panel.
2. Connect the ground wire between the PDP and the main AC Panel (utility grid).
3. Connect Neutral from the PDP to the main AC panel (utility grid).
4. Connect L1 and L2 from the input side of the 60 A, 120/240 VAC, two-pole, Type QOU AC1 breaker (L1 and L2 jumpers) to the main AC panel (utility grid).

Figure 35 Wiring the PDP to the Inverter Load Sub-Panel or Utility Grid

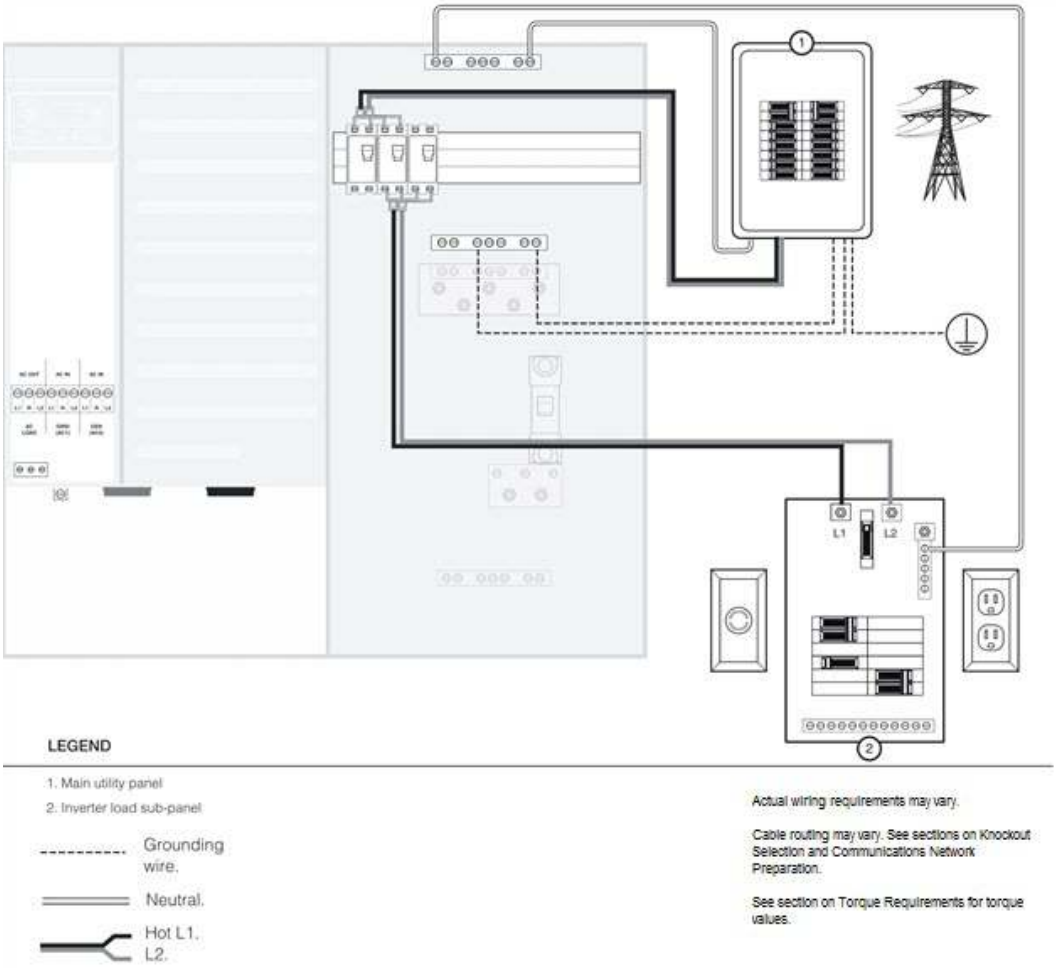

Basic Functional Test – Single Inverter

Complete the following steps to perform a basic functional test of the XW Pro. If any test fails, refer to the Troubleshooting section in the Owner's Guide for assistance.

Confirming All Connections

After the AC and DC wiring have been installed and connected, check that all connections are correct and secure, and re-secure the AC access panel.

DANGER

HAZARD OF ELECTRIC SHOCK, EXPLOSION, ARC FLASH, AND FIRE

- Apply appropriate personal protective equipment (PPE) and follow safe electrical work practices. See NFPA 70E or CSA Z462.
- This equipment must only be installed and serviced by qualified electrical personnel.
- Never operate energized with covers removed
- Energized from multiple sources. Before removing covers identify all sources, de-energize, lock-out, and tag-out and wait 5 minutes for circuits to discharge
- Always use a properly rated voltage sensing device to confirm all circuits are de-energized.

Failure to follow these instructions will result in death or serious injury.

DANGER

HAZARD OF ELECTRIC SHOCK, EXPLOSION, ARC FLASH, AND FIRE

- Remove watches, rings, or other metal objects.
- This equipment must only be installed and serviced by qualified electrical personnel.
- Keep sparks and flames away from the batteries.
- Use tools with insulated handles.
- Wear protective glasses, gloves and boots.
- Do not lay tools or other metal parts on top of batteries.

Failure to follow these instructions will result in death or serious injury.

⚠ ⚠ DANGER

HAZARD OF ELECTRIC SHOCK, EXPLOSION, ARC FLASH, AND FIRE

- Battery Circuit Breakers must be installed according to the specifications and requirements defined by Schneider Electric.
- Servicing of batteries must only be performed by qualified personnel knowledgeable of batteries and the required precautions. Keep unqualified personnel away from batteries.
- Disconnect the charging source prior to connecting or disconnecting battery terminals.

Failure to follow these instructions will result in death or serious injury.

Applying DC Power to the Inverter

NOTICE

DC REVERSE POLARITY

Before making the final DC connection or closing the DC breaker or disconnect, check cable polarity at both the battery and the inverter/charger. Positive (+) must be connected to positive (+). Negative (–) must be connected to negative (–).

Failure to follow these instructions can result in equipment damage.

To apply DC power to the inverter:

1. Before applying DC power to the inverter, measure the voltage and check polarity at all connections. Measure at the battery side of the disconnect or breaker.

Note: Voltage should be between 40 to 64 volts for a 48-volt system. If the DC voltage is low, the battery bank must be charged externally. Charge the battery bank, and then restart the functional test.

If the DC voltage is lower than the Low Battery Cut Out (LBCO) setting (44 volts for a 48-volt system) a DC Under Voltage Fault (F48) will be triggered. If the DC voltage is lower than the default LBCO voltage, lower the LBCO setting accordingly.

2. Apply battery (DC) power to the inverter by closingthe battery bank DC disconnect. The inverter will power up in standby mode, and the inverter information panel will display Stb(standby), as shown in *Figure 36* .

Figure 36 Power-up Display

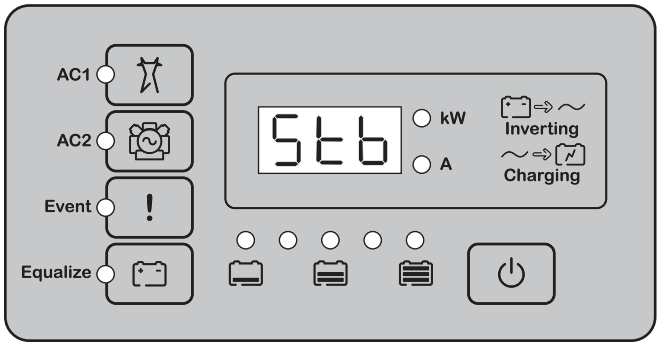

Preparing for Functional Tests

Before any functional test is performed after commissioning, the firmware on the inverter needs to be upgraded to the latest version.

Upgrading the Firmware

The firmware running on the XW Pro can be upgraded under the Firmware tab in the XW Pro menus.

To upgrade the firmware:

1. Download the latest firmware for your XW Pro from http://solar.schneider-electric.com and save it onto your computer.
2. Using the Conext Gateway, place the entire system in **Standby** before installing the inverter firmware update.

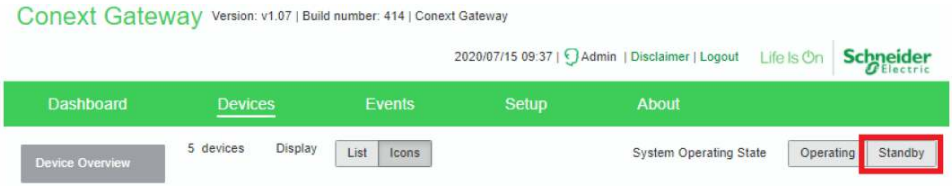

3. Install the firmware on the inverters by clicking Upgrade or Upgrade All XWs for single or multi-unit systems respectively.

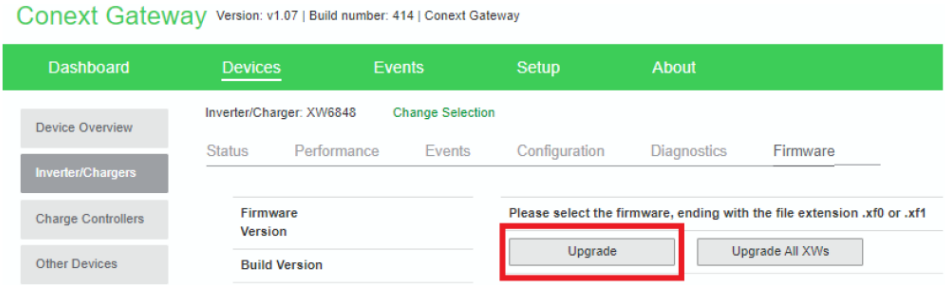

4. Re-apply the grid code settings as per instructions in *Managing Compliance Regions on page 73*.
   NOTE: This is required even if the inverter is still showing the correct grid code in the device menu.

Managing Compliance Regions

⚠ WARNING

ADVANCED CONFIGURATION HAZARD

- Advanced menu settings should be used by qualified personnel only.
- Three phase operation should be configured by qualified personnel only.
- Consult with the local utility before enabling XW Pro sell mode or grid support functions.
- Do not change these settings unless you are under the supervision and direction of qualified personnel.
- Connect the Conext Gateway and the network router connected to the Conext Gateway to an assured power source during configuration.

Failure to follow these instructions can result in death, serious injury, or equipment damage.

The Grid Codes tab in the XW Pro menus provides access to the autonomous grid interactive functionality including active/reactive power curves and ride-through profiles. By selecting the applicable grid compliance region, the XW Pro immediately makes all the appropriate configurations to conform with the requirements of that region, which in turn also sets the nominal grid frequency of the unit. Further adjustments of these functions can be applied after selecting a compliance region. The menu options in this page are password protected.

To apply a compliance region to all units connected to a Conext Gateway simultaneously, access the Region Settings menu under Setup > Configuration. As with compliance settings for individual XW Pro in their respective menus, this menu is accessible only by qualified technicians.

To apply a grid code:

1. Using Conext Gateway, navigate to Setup -> Configuration -> Region Settings.

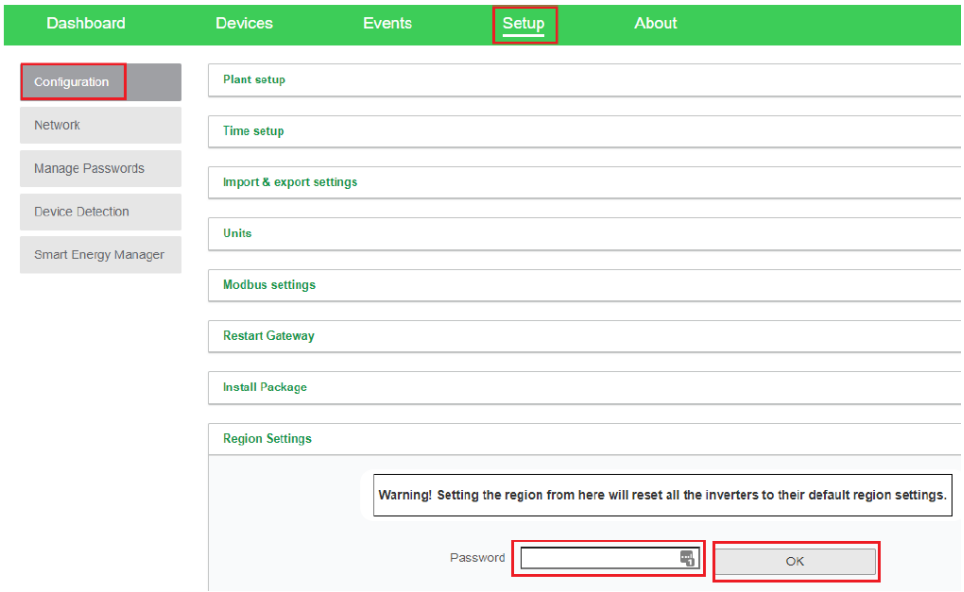

2. Select the appropriate region grid code from the Select Region pulldown menu.
   a. For grid interactive systems, the appropriate grid code is specified by the utility in their interconnection rules.
   b. For AC-coupled systems, ensure that the AC coupled PV inverters are set to the same grid code.
   c. Note, off-grid systems may typically use any of the grid codes. For off-grid AC coupled systems, the California Rule no. 21-2018 grid code is recommended for the XW Pro and PV inverters.

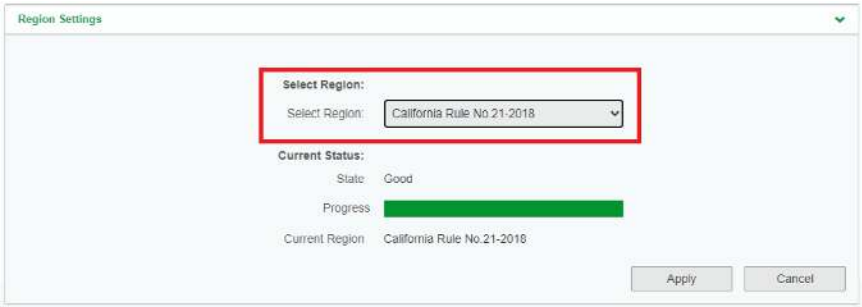

3. Verify that each inverter accepted the correct Grid Code Region by navigating to Devices -> (inverter) -> Grid Codes.

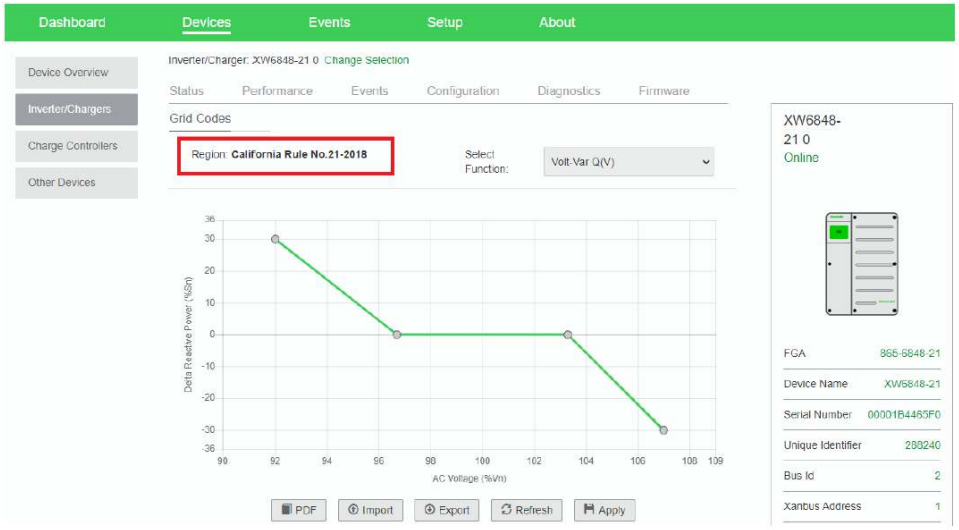

Enabling the Inverter

Invert mode is enabled by default, and the XW Pro should begin inverting upon transitioning from standby mode. If invert mode is disabled, the inverter information panel will display "---" once out of standby mode, as shown in *Figure 37* . If the XW Pro powers up in standby mode, press the STARTUP/SHUTDOWN button momentarily to change the mode from standby to operating.

Figure 37 Disabled Mode

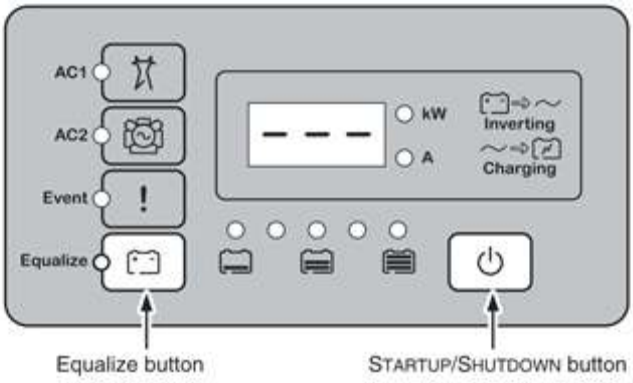

To enable the inverter:

- On the inverter information panel, simultaneously press the STARTUP/SHUTDOWN button and the Equalize button. The XW Pro is now enabled, and En (enabled) is briefly displayed on the inverter information panel, as shown in *Figure 38* .

Figure 38 Enabled Mode

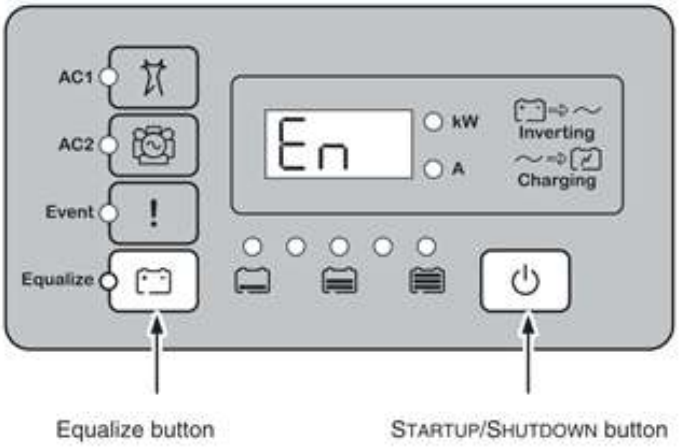

To disable the inverter:

1. On the inverter information panel, simultaneously press the STARTUP/SHUTDOWN button and the Equalize button. The XW Pro is now disabled, and diS (disabled) is briefly displayed on the inverter information panel, followed by "---" (as shown in *Figure 39*).

Figure 39 Transition to Disabled Mode

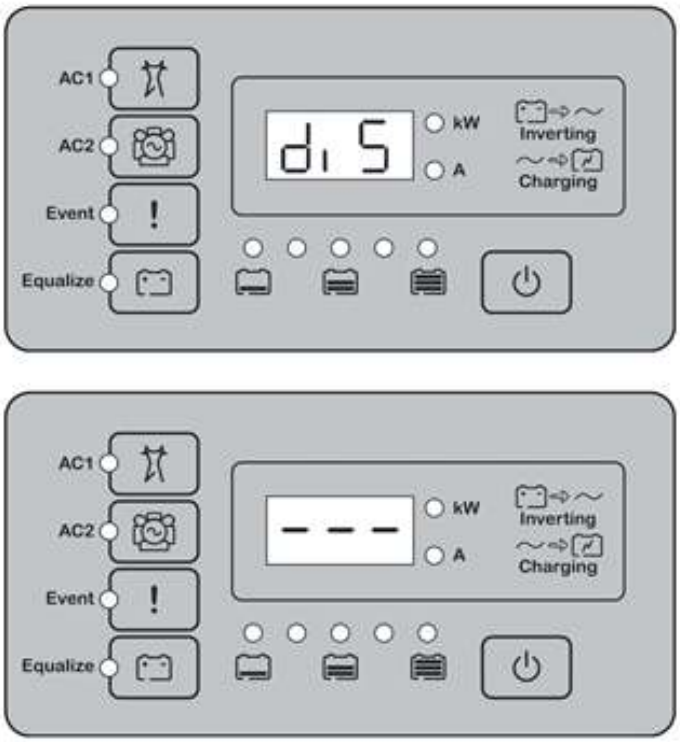

2. Monitor the invert (green kW) LED to confirm which mode the inverter is in:
    a. kW *LED OFF* – Invert mode is disabled. The inverter/charger is not powering the AC loads. However, if good AC is present, it is passed through to the loads.
    b. Sch displayed on the inverter information panel – The inverter/charger is in *search*mode and is looking for an AC load greater than the Maximum Search Watts setting (default = 25 watts). The display shows Sch (Search) when this mode has been enabled.
    c. *LED ON* – The inverter/charger is on. The inverter is operating and is able to provide power to the AC loads. This is the default mode on initial power-up once the unit is taken out of standby mode.

If the inverter is not operating or the inverter LED (kW) does not turn on, check all connections. Check the inverter's DC voltage and polarity on the positive (+) and negative(–) terminals. Check the Event LED. If the Event LED is on, check for an event code on the information panel. Correct the reported event and clear the event by acknowledging it. If the DC voltage is low, then the battery bank needs to be charged externally. Charge the battery bank and restart the functional test.

Checking AC Voltage

Note: This test requires the use of a voltmeter.

To perform an AC voltage check:

1. With the inverter on (green kW LED is on and steady), verify the AC voltage at AC Loads block terminal L1-Load to N-Load.
2. Verify that neutral is bonded to ground in the system by measuring the hot and neutral voltages relative to ground. Neutral-to-ground should equal zero (0) volts.
3. After confirming the correct AC voltage, turn on your AC output breaker and place a load on the inverter (plug in a light or other load to an outlet the inverter is powering).
4. Confirm that the AC load that was just turned on is working properly.

Figure 40 Checking AC Voltage

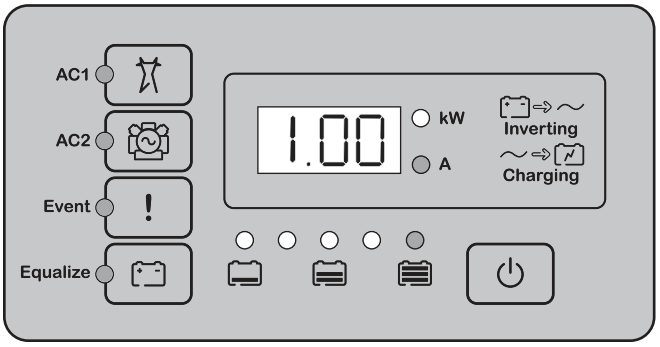

Confirming Battery Charger Operation

To confirm battery charger operation:

1. Apply AC from grid or generator. LEDs will blink while the power source is qualified.
2. Check LEDs (AC1 or AC2) on the front panel. One of them must be ON for the unit to charge.
3. Check the amp (A) LED. If the A LED is ON, the unit is charging and the battery current is displayed on the inverter information panel.

Figure 41 Checking Charging Operation

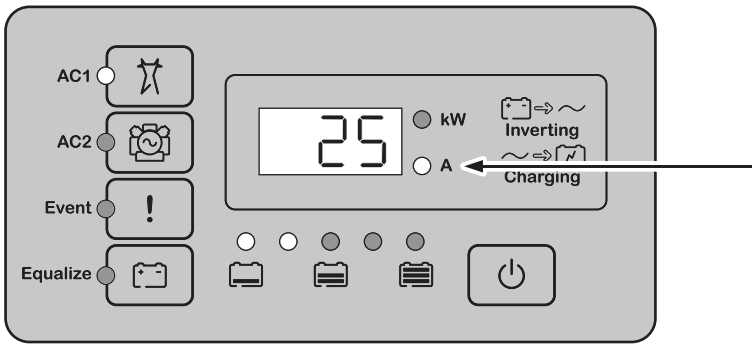

Note: Unless the inverter/charger settings have been changed, the inverter will charge as if it has a large (> 440 Ah) flooded battery bank (factory default setting). In newly installed systems, adjust the battery charging set points to match the batteries as installed.

This completes the functional test. If any of the internal set points need to be adjusted on the XW Pro, consult the configuration chapter of the Owner's Guide.

Figure 42 Functional Test for Single Inverter Systems

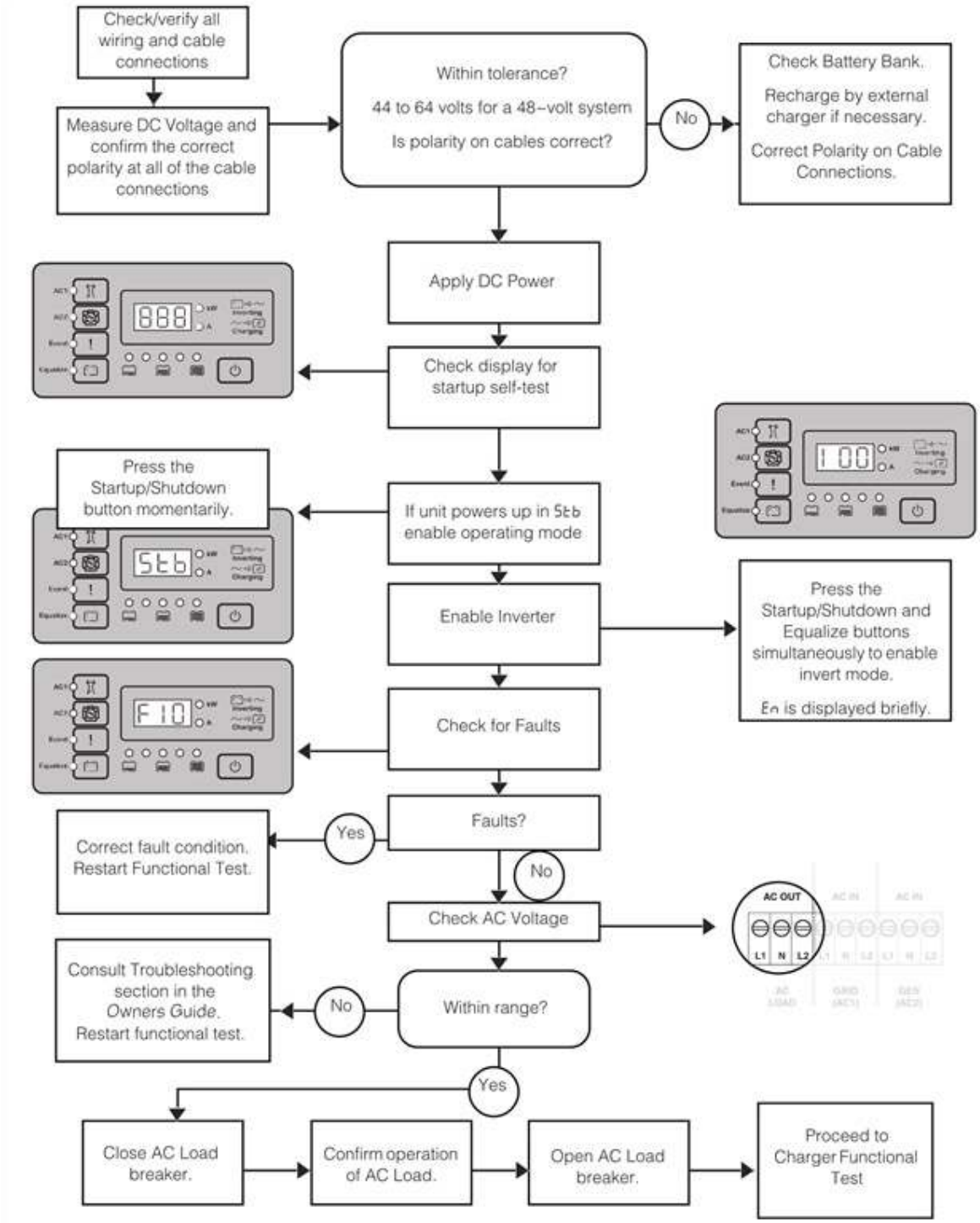

Wiring Additional XW Pro units with a PDP

This section provides instructions for making AC and DC connections between multiple XW Pro units and a Power Distribution Panel (PDP), using the cables that are included with each PDPand Connection Kit for INV2 INV3 PDP.

Note: The installation steps described in this section require a Connection Kit for INV2 INV3 PDP (part number 865-1020-02) and PDP 120/240V 60A Breaker Kit (part number 865-1215-01) for each additional XW Pro.

For more information, contact your local Schneider Electric Sales Representative or visit our website at: https://solar.schneider-electric.com/tech-support/

NOTICE

EQUIPMENT DAMAGE

Be sure to finish all wiring (AC, DC, Xanbus, communications) when installing additional XW Pro units including wiring in *"Installing AC sync and Xanbus cables" on page 116* prior to powering up the system.

Failure to follow these instructions can result in equipment damage.

Pre-Installation Steps

DANGER

HAZARD OF ELECTRIC SHOCK, EXPLOSION, ARC FLASH, AND FIRE

- Apply appropriate personal protective equipment (PPE) and follow safe electrical work practices. See NFPA 70E or CSA Z462.
- This equipment must only be installed and serviced by qualified electrical personnel.
- Never operate energized with covers removed
- Energized from multiple sources. Before removing covers identify all sources, de-energize, lock-out, and tag-out and wait 5 minutes for circuits to discharge
- Always use a properly rated voltage sensing device to confirm all circuits are de-energized.

Failure to follow these instructions will result in death or serious injury.

DANGER

HAZARD OF ELECTRIC SHOCK, EXPLOSION, ARC FLASH, AND FIRE

- Remove watches, rings, or other metal objects.
- This equipment must only be installed and serviced by qualified electrical personnel.
- Keep sparks and flames away from the batteries.
- Use tools with insulated handles.
- Wear protective glasses, gloves and boots.
- Do not lay tools or other metal parts on top of batteries.

Failure to follow these instructions will result in death or serious injury.

DANGER

HAZARD OF ELECTRIC SHOCK, EXPLOSION, ARC FLASH, AND FIRE

- Battery Circuit Breakers must be installed according to the specifications and requirements defined by Schneider Electric.
- Servicing of batteries must only be performed by qualified personnel knowledgeable of batteries and the required precautions. Keep unqualified personnel away from batteries.
- Disconnect the charging source prior to connecting or disconnecting battery terminals.

Failure to follow these instructions will result in death or serious injury.

Before installing additional XW Pro units, disconnect all power from the system.

Depending on your installation, you may need to perform the following pre-installation steps:

1. Wall-mount additional XW Pro(s), as needed. See *Wall-Mounting the XW Pro and PDP on page 32*.
2. Install Conduit Box as needed. See *Installing the XW Conduit Box on page 34*.
3. Prepare the communications network. See See *"Installing AC sync and Xanbus cables" on page 116*.
4. Install a Conext Gateway to configure programmable settings and to name specific network components, as needed. See *Conext Gateway Installation on page 121*.

Note: When installing more than one XW Pro at a location, use a Conext Gateway to give a unique Device Number to each XW Pro. This will help ensure Master/Slave relationships and other relevant configurations match the planned setup.

Up to three XW Pro units can be connected to a PDP in a split-phase system. To connect two XW Pro units to a PDP, see *"Installing a Dual Inverter/Charger System" on the next page*. To connect three XW Pros to a PDP, see *"Installing a Triple Inverter/Charger System" on page 86*.

Grounding XW Pro Inverter/Charger

⚠ WARNING

UNGROUNDED EQUIPMENT

Equipment ground terminals must be reliably connected to ground by appropriately sized grounding conductors. All installations must comply with national and local codes. Consult local and national codes for specific grounding and bonding requirements.

Failure to follow these instructions can result in death, serious injury, or equipment damage.

The XW Pro is provided with ground terminals that must be reliably connected to ground (protective earth) by appropriately sized equipment grounding conductors. System grounding for the AC and DC systems must be done according to all applicable NEC and local installation codes.

For more information about system grounding, see *"Grounding the DC System" on page 52* and *"Grounding AC Equipment" on page 61*.

Installing a Dual Inverter/Charger System

This section provides instructions for adding a second XW Pro to your installation. Complete the following installation steps only after you have already connected the PDP to the first XW Pro, as shown in *Wiring the XW Pro with a PDP on page 52*.

Grounding DC

See *"Grounding the DC System" on page 52*.

Installing DC Positive Bus Bar

1. Remove the existing bus bar from the bottom terminal of the GJ250A 160 VDC, 3/8" DC disconnect/breaker (pre-installed in the PDP).
2. Install a second GJ250A - DC rated breaker (included with the Connection Kit for INV2 INV3 PDP) next to the existing DC disconnect/breaker.
3. Install the DC positive bus bar included with the Connection Kit for INV2 INV3 PDP. (his DC positive bus bar supports up to three GJ250A - DC rated breakers.
4. Remove the appropriate knockout from the Power Distribution Panel (PDP) lower faceplate.

DC Wiring for a Dual-Inverter System

Note: Replace faceplates after all AC and DC wiring is complete.

1. Using the instructions provided in *"Making DC Connections" on page 55*, make DC connections from the Power Distribution Panel (PDP) to:
    a. the first XW Pro Inverter/Charger (INV1) and
    b. the battery bank

Note: Before connecting the DC cables from the PDP to the battery, perform the procedures in *"AC Wiring for a Dual-Inverter System" on page 84*.

2. Connect the positive battery cable for INV2 (included with the Connection Kit for INV2 INV3 PDP) to the top terminal on the second DC disconnect/breaker, as shown in *Figure 43* .
3. Connect the negative battery cable for INV2 (included with the Connection Kit for INV2 INV3 PDP) to the DC Negative Bus.
4. Connect the positive battery cable to the positive terminal on the second XW Pro (INV2) and the negative battery cable to the negative terminal on INV2.

Figure 43 DC Connections to Dual Inverter

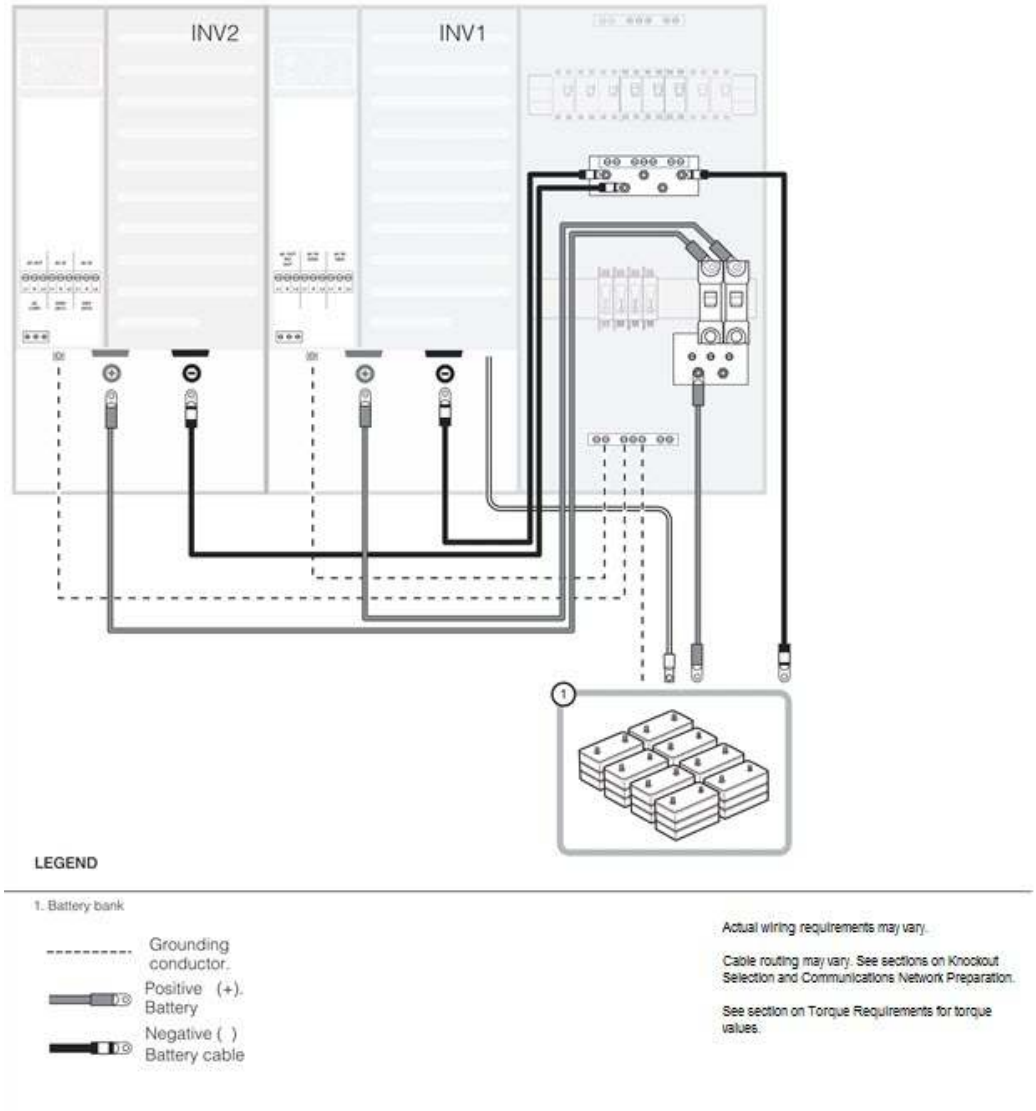

Grounding AC Equipment

⚠ WARNING

UNGROUNDED EQUIPMENT

Equipment ground terminals must be reliably connected to ground by appropriately sized grounding conductors. All installations must comply with national and local codes. Consult local and national codes for specific grounding and bonding requirements.

Failure to follow these instructions can result in death, serious injury, or equipment damage.

See *"Grounding AC Equipment" on page 61*.

Installing Breakers

Wiring a second XW Pro requires the installation of additional 60 A, 120/240 VAC, two-pole, type QOU AC breakers (included with the PDP 120/240V 60A Breaker Kit).

To install breakers for a dual-inverter system:

1. In the PDP, disconnect all AC wires (from the utility grid or generator and to the inverter load sub-panel) and remove the pre-installed two-tab power distribution jumpers connected to the top and bottom terminals on the AC breakers.
2. Remove bypass interlock bracket.
3. Disconnect INV1 AC LOAD (INV1 L1-LOAD, INV1 L2-LOAD) wires from the top terminals on right-hand side breaker.

Note: Ensure that the neutral (INV1 N-LOAD) wiring remains connected, as shown in *Wiring the XW Pro with a PDP on page 52*.

4. Install the dual-pole AC breakers (included with the PDP 120/240V 60A Breaker Kit) onto the DIN rail, next to the pre-installed dual-pole AC breakers in the PDP.
5. Attach the four, four-tab jumpers (included in the Connection Kit for INV2 INV3 PDP) to top and bottom of AC breakers as shown in *Figure 44* .

Figure 44 Dual Inverter AC Breaker Arrangement with Multiple AC Input Sources

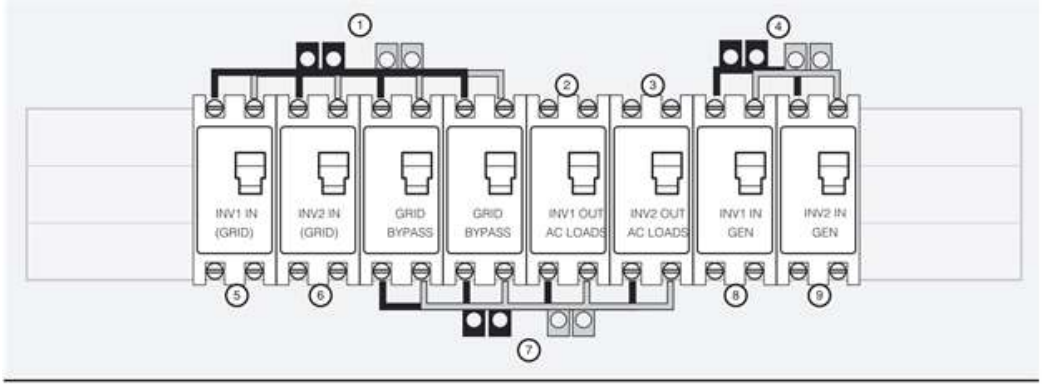

1. From main utility panel

NOTE: Install L1 power distribution bar (jumper) in first Grid breaker slot facing FRONT.

2. From AC Load on INV1

3. From AC Load on INV2

4. From generator disconnect

NOTE: Install L1 jumper in first Gen breaker slot facing REAR.

5. To AC1 on INV1

6. To AC1 on INV2

7. To inverter load sub-panel

NOTE: Install L1 jumper in first Bypass breaker slot facing REAR.

8. To AC2 on INV1

9. To AC2 on INV2

Note: If a backup generator or other secondary AC source is installed in the system, reuse two of the dual-tab jumpers previously installed on INV1 Grid/Bypass breakers for generator breakers.

AC Wiring for a Dual-Inverter System

1. Connect the grid wiring and inverter load sub-panel wiring to the new jumpers as shown in *Figure 45 on page 85*.
2. Connect INV1 LOAD (INV1 L1-LOAD, INV1 L2-LOAD), INV2 LOAD (INV2 L1-LOAD, INV2 L2-LOAD), and INV2 GRID (INV2 L1-GRID, INV2 L2-GRID) wires to AC breakers as shown in *Figure 45* .
3. Connect neutral (INV2 N-LOAD) and ground (INV2 GROUND) wiring as shown in *Figure 45* .
4. Remove the knockouts on the upper faceplate of the PDP to accommodate additional breakers.
5. Re-label the AC breakers with the appropriate labels, included with the Power Distribution Panel (PDP).
6. Install the custom designed bypass interlock plate, as shown in *Figure 46 on page 86*.

Figure 45 AC Wiring for Dual-Inverter Systems

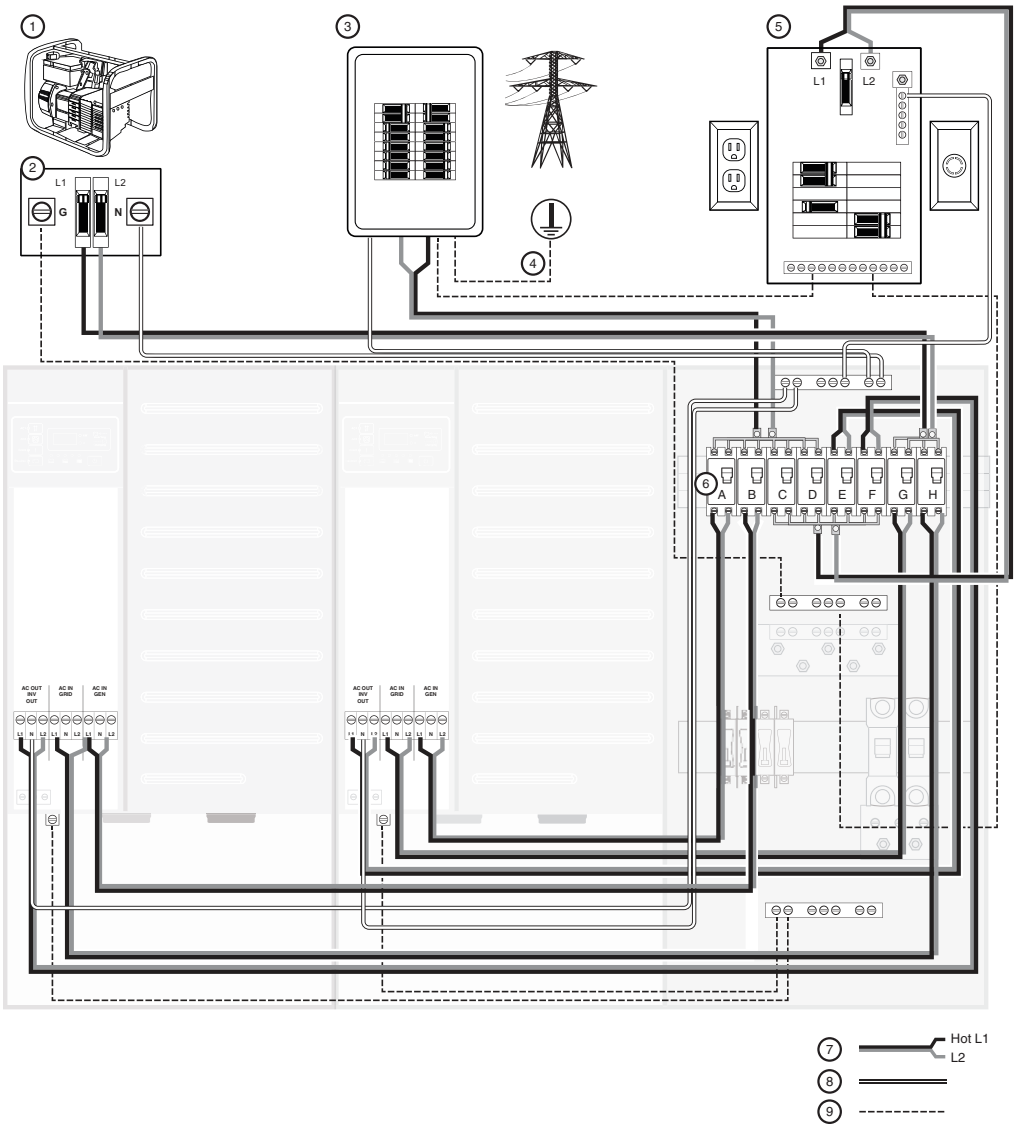

1	AC generator	A	INV1 IN (Grid)
2	Generator disconnect	B	INV2 IN (Grid)
3	Main utility panel	C	Grid bypass
4	Grounding electrode connector	D	Grid bypass
5	Inverter load sub-panel	E	INV1 OUT (AC loads)
6	AC breakers	F	INV2 OUT (AC loads)
7	L1 and L2	G	INV1 IN (Gen)
8	Neutral	H	INV2 IN (Gen)
9	Ground		

NOTES:

- Actual wiring requirements may vary.
- Cable routing may vary. See *"Knockout Selection" on page 28* and *"Communications Network Preparation" on page 36*.
- See *"Torque Values" on page 41* for torque values. For torque connections to the battery terminals, see the battery manufacturer's recommendations.

Installing Bypass Interlock Plate

To install the custom designed bypass interlock plate:

1. Replace the upper and lower faceplates on the PDP.
2. Verify that the breakers are in the down position and place the bypass interlock plate over the breakers, as shown in *Figure 46* , and secure it in place with the hardware provided.
3. To set it in Normal position, slide the bypass plate to the right, as shown in *Figure 46* .

Figure 46 Installing the Custom Designed Bypass Interlock Plate

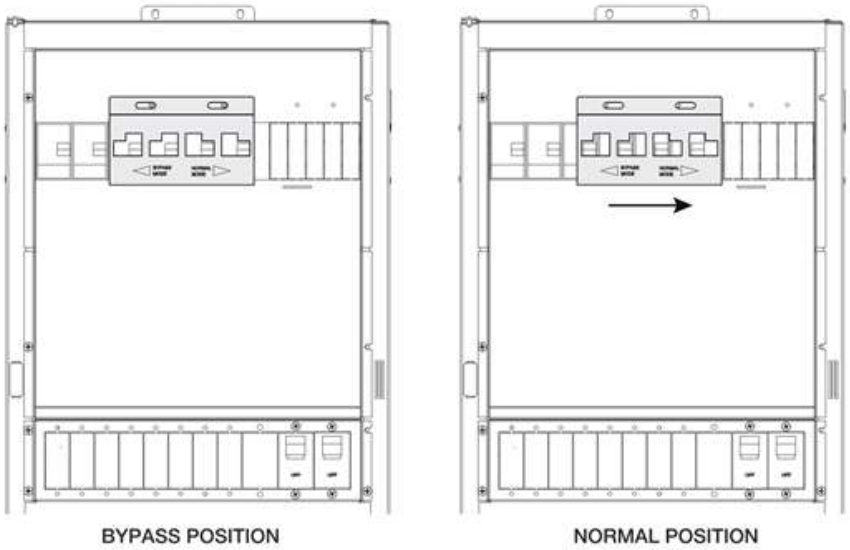

Installing a Triple Inverter/Charger System

NOTICE

EQUIPMENT DAMAGE

- The Automatic Transfer Relays are rated at 60 A.
- Loads connected at AC OUT must not exceed the inverter's overload ratings or the 60 A limit, whichever is lower. Unless an external contactor or external transfer switch is used, the 60 A limit also applies to loads connected to the AC OUT bus of multiple inverters connected in parallel.

Failure to follow these instructions can result in equipment damage.

This section provides instructions for adding a second and third XW Pro to your installation. Complete the following installation steps only after you have already connected the PDP to the first XW Pro, as shown in *Wiring the XW Pro with a PDP on page 52*.

A system of three XW Pro units can power loads of up to 20.4 kVA. To avoid scenarios where any single unit can briefly bear the entire current drawn by the loads, an external contactor or transfer switch is required. For further details of planning for larger systems, refer to the XW Pro Multi-unit Design Guide (990-91373).

Grounding DC

⚠ WARNING

UNGROUNDED EQUIPMENT

Equipment ground terminals must be reliably connected to ground by appropriately sized grounding conductors. All installations must comply with national and local codes. Consult local and national codes for specific grounding and bonding requirements.

Failure to follow these instructions can result in death, serious injury, or equipment damage.

See *"Grounding the DC System" on page 52*.

Installing a DC Positive Bus Bar

1. Remove the existing bus bar from the bottom terminal of the GJ250A 160 VDC, 3/8" stud DC disconnect/breaker (pre-installed in the PDP).
2. Install a second and third GJ250A - DC rated breaker (included with each Connection Kit for INV2 INV3 PDP) next to theexisting DC disconnect/breaker.
3. Install the DC positive bus bar included with the Connection Kit for INV2 INV3 PDP. This DC positive bus bar supports up to three GJ250A - DC rated breakers.
4. Remove the appropriate knockouts from the Power Distribution Panel (PDP) lower faceplate.

Note: Replace faceplates after AC and DC wiring is complete.

DC Wiring for a Triple-Inverter System

Note: One pair of battery cables is included with each Connection Kit for INV2 INV3 PDP and Power Distribution Panel (PDP).

1. Using the instructions provided in *"Making DC Connections" on page 55*, make DC connections from the Power Distribution Panel (PDP) to:
   a. the first XW Pro Inverter/Charger (INV1) and
   b. the battery bank.

Note: Before connecting the DC cables from the PDP to the battery, perform the procedures in *"AC Wiring for a Triple-Inverter System" on page 89*.

2. Connect the positive battery cable for INV2 (included with the Connection Kit for INV2 INV3 PDP) to the top terminal on the second DC disconnect/breaker.
3. Connect the negative battery cable for INV2 (included with the Connection Kit for INV2 INV3 PDP) to the DC Negative Bus.
4. Connect the positive battery cable to the positive terminal on the second XW Pro (INV2) and the negative battery cable to the negative terminal on INV2.
5. Connect the positive battery cable for INV3 (included with the Connection Kit for INV2 INV3 PDP) to the top terminal on the third DC disconnect/breaker.
6. Connect the negative battery cable for INV3 (included with the Connection Kit for INV2 INV3 PDP) to the DC Negative Bus.
7. Connect the positive battery cable to the positive terminal on INV3 and the negative battery cable to the negative terminal on INV3.

Note: Before connecting the DC cables from the PDP to the battery, perform the procedures in *"AC Wiring for a Triple-Inverter System" on the next page*.

Figure 47 DC Connections for a Triple-Inverter System

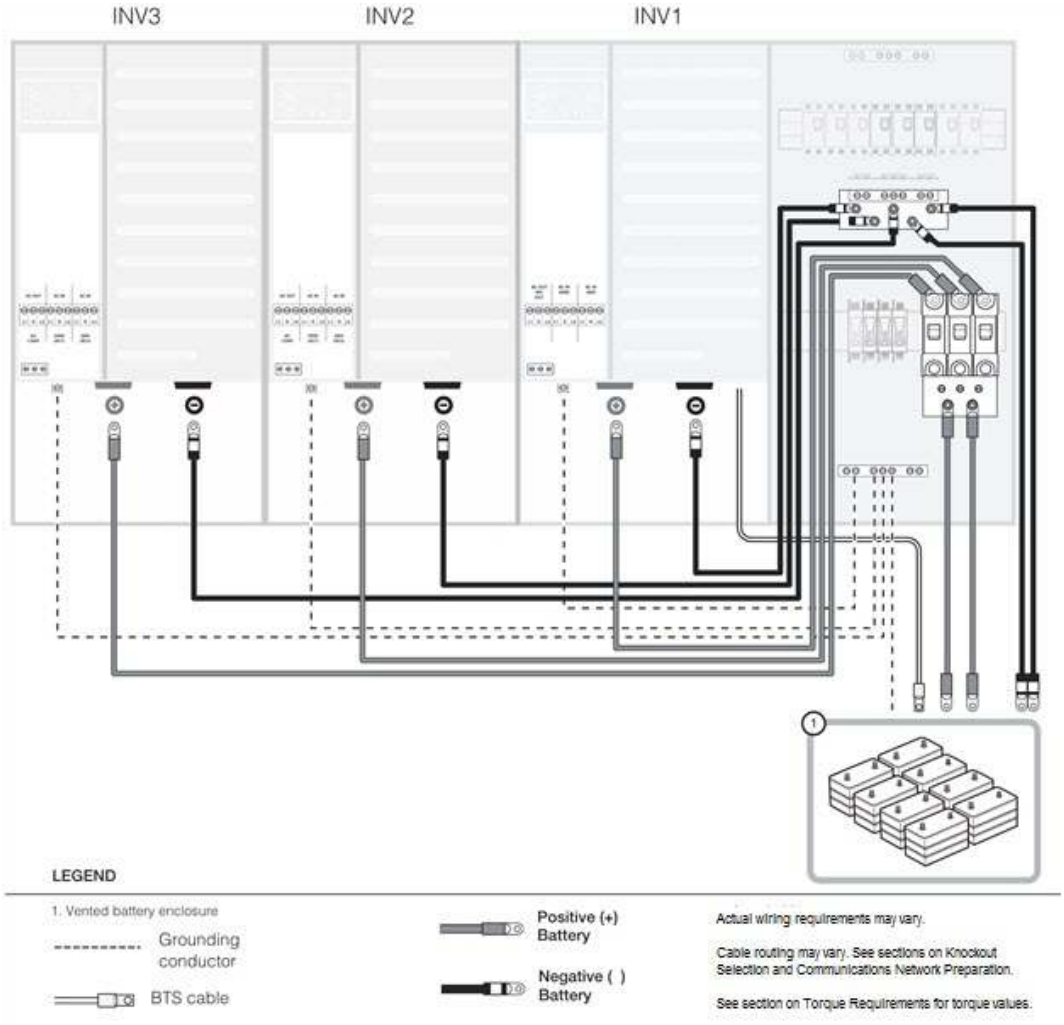

Preparing the Power Distribution Jumper (for Triple-Inverter System Only)

Each Connection Kit for INV2 INV3 PDP includes four, four-tab power distribution jumpers. In a triple-inverter system, only three tabs per jumper are needed. Depending on your installation, you will need either:

- Four jumpers for an installation with a single AC source (AC1 or AC2), or
  Six jumpers for an installation with two AC sources(AC1 and AC2)
- Cut away one of the four tabs on each jumpers that you will need for your installation.

Installing Breakers

Wiring a second and third XW Pro requires the installation of 60 A, 120/240 VAC, two-pole, type QOU AC breakers (included with the Conext 120/240VAC Breaker Kits).

To install breakers for a triple-inverter system:

1. In the PDP, disconnect all AC wires (from the utility grid or generator and to the inverter load sub-panel) and remove the pre-installed two-tab jumpers connected to the top and bottom terminals on the AC breakers.
2. Remove bypass interlock bracket.
3. Disconnect INV1 AC LOAD (INV1 L1-LOAD, INV1 L2-LOAD) wires from the top terminals on right-hand side breaker.

Note: Ensure that the neutral (INV1 N-LOAD) wiring remains connected, as shown in *"AC Wiring the Power Distribution Panel (PDP) to the XW Pro" on page 63*.

4. Mount the 60 A, 120/240 VAC, two-pole, type QOU AC breakers onto the DIN rail, as shown in *Figure 48 on page 90* and *Figure 49 on page 91*.
5. Install two jumpers, L1 and L2 at the output (bottom) terminals of the INV1, INV2, and INV3 AC Load breakers.
6. Install two jumpers, L1 and L2 at the input (top) terminals of the INV1, INV2, and INV3 Grid breakers. See *Figure 48* .
7. If the installation includes a second AC source, install two jumpers, L1, and L2 at the input (top) terminals of the INV1, INV2, and INV3 Gen breakers. See *Figure 48* .

Grounding AC Equipment

See *"Grounding AC Equipment" on page 61*.

AC Wiring for a Triple-Inverter System

Note: For illustrations of the following wiring arrangements, see *Figure 48 on page 90* and *Figure 49 on page 91*.

1. Connect L1 and L2 AC wiring from each INV Grid breaker to the corresponding AC Input (AC1) terminal on each of the three XW Pros.

2. If the installation includes a second AC source, connect L1 and L2 AC wiring from each INV Gen breaker to the corresponding AC Input (AC2) terminal on each of the three XW Pros.
3. Connect L1 and L2 AC wiring from each INV AC Load terminal from each of the three inverters to the corresponding AC INV Out breaker terminal in the PDP.
4. Connect L1 and L2 AC Load wiring to the INV Out (AC Load) jumper.
5. If the installation includes a second AC source, connect L1 and L2 AC wiring from the Generator (or other source) disconnect to the Gen breaker jumpers.
6. Connect L1 and L2 AC wiring from the Utility Grid distribution panel to the Grid breaker jumpers.
7. Connect the neutral wiring from INV1, INV2, and INV3 to the neutral bus bar in the PDP.
8. Connect the ground wiring from INV1, INV2, and INV3 to the ground bus bar in the PDP.
9. Re-label the AC breakers with the appropriate labels, included with the Power Distribution Panel (PDP).

Figure 48 Triple-Inverter AC Breaker Arrangement with a Single AC Input Source

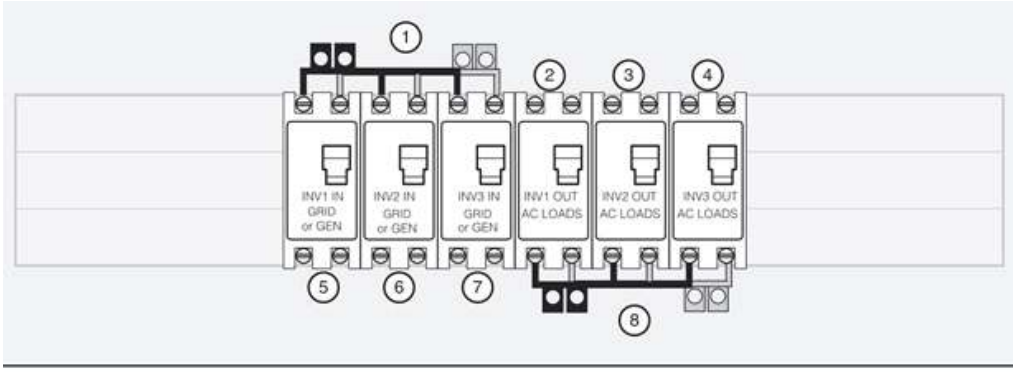

1. From AC source disconnect or transfer switch

NOTE:
Install L1 power distribution bar (jumper) in first GRID/GEN breaker slot.

2. From AC Load on INV1
3. From AC Load on INV2
4. From AC Load on INV3
5. To AC1 or AC2 on INV1
6. To AC1 or AC2 on INV2
7. To AC1 or AC2 on INV3
8. To inverter load subpanel

Figure 49 Triple-Inverter AC Breaker Arrangement with Two AC Input Sources

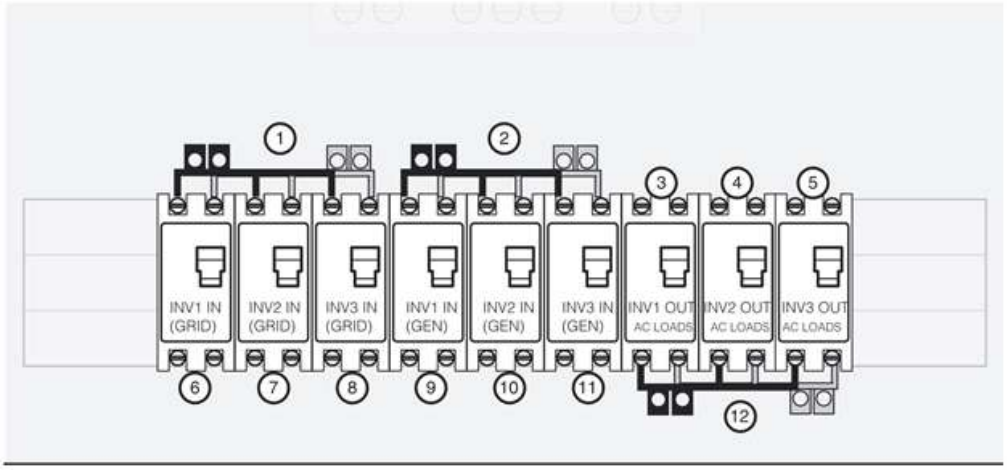

1. From main AC distribution panel or transfer switch

NOTE: Install L1 power distribution bar (jumper) in first GRID/GEN beaker slot facing FRONT.

2. From generator disconnect
3. From AC Load on INV1
4. From AC Load on INV2
5. From AC Load on INV3
6. To AC1 on INV1
7. To AC1 on INV2
8. To AC1 on INV3
9. To AC2 on INV1
10. To AC2 on INV2
11. To AC2 on INV3
12. To Inverter main utility panel or transfer switch

NOTE: Install L1 jumper in first Bypass breaker slot facing REAR

Installing an External Bypass Switch

Note: The Conext Power Distribution Panel (PDP) does not have enough breaker locations to accommodate bypass breakers in more than three inverter systems. Therefore, an external bypass switch may be needed. For an illustration of an External Bypass Switch installation, see *Figure 50 on page 92*.

Figure 50 Wiring an External Bypass Switch

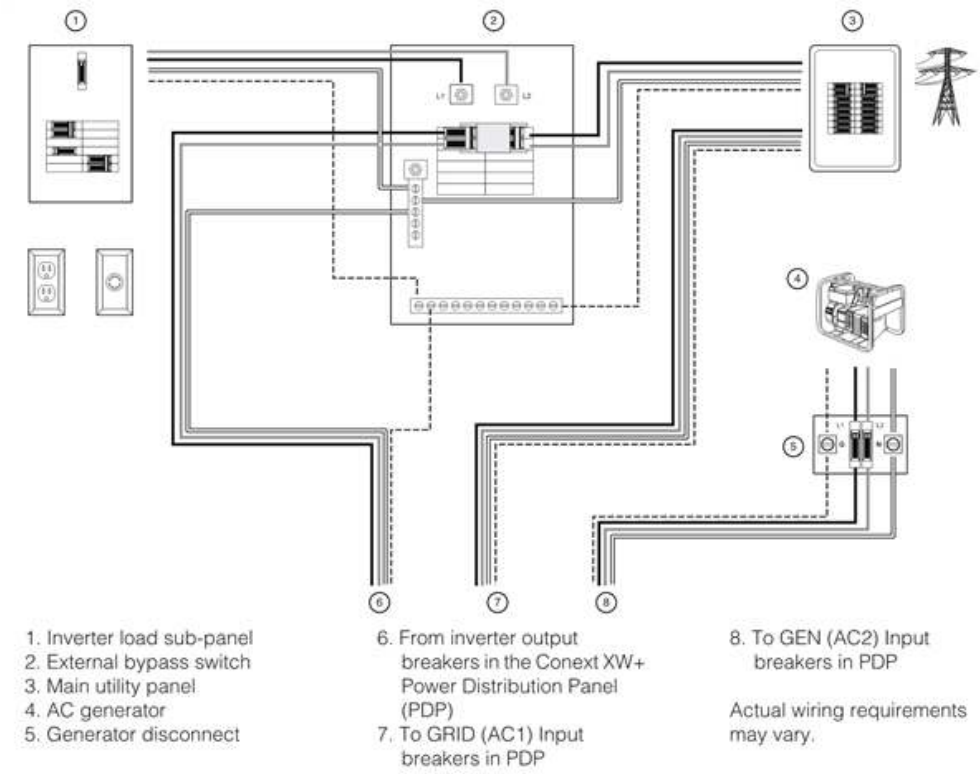

Basic Functional Test - Multiple Inverters

The following steps will complete a basic functional test of multiple XW Pros. If any test fails, please refer to the Troubleshooting section in the Owner's Guide for assistance.

To perform a functional test on multiple inverters:

1. Check/verify all wiring and cable connections.
2. Measure DC voltage at the DC terminals on the inverter and confirm it is within range and has correct polarity. The default acceptable range is 46 to 64 VDC for 48 V systems.
3. Switch INV1 DISCONNECT (DC disconnect switch) to the ON position.
4. Check inverter display for startup self-test during which LEDs will flash momentarily. Once self-test is complete, the inverter will display Stb. (The Event/Warning LED may flash for a few seconds but eventually will turn off. If the Event/Warning LED persists, check to make sure a battery temperature sensor is connected. Also, if the inverter has been pre-configured, it may go straight into normal operating mode).
5. Using the Conext Gateway, set the First (Master) Inverter Device Number:
    a. Go to the inverter’s Configuration page and enable Advanced View.
    b. Under Device Instance set Device Number to 1.
    c. Click Apply.
6. Switch INV2 DISCONNECT (DC disconnect switch) to the ON position.

7. Check inverter display for startup self-test during which LEDs will flash momentarily. Once self-test is complete, the inverter will display Stb. If the inverter has been pre-configured, it may go straight into normal operating mode or display F66 warning.
8. Using the Conext Gateway, set the Second (Slave) Inverter Device Number and Inverter Mode:
    a. Select the new inverter XW6848, instance in the device page.
    b. Go to the inverter's Configuration page and enable Advanced View.
    c. Under Device Instance set Device Number to 2 (or the next unused number).
    d. Click Apply. The inverter will now appear as instance 2 in the device list.
    e. Under Multi-unit Configuration, set Inverter Mode to Split Phase Slave.
    f. Click Apply.
9. Check for events. If events exist, correct and restart Functional Test.
10. If a third inverter is installed, repeat steps to configure it as a Slave.
11. Using the Conext Gateway, enable the system by going to the Devices page, and next to System Operating State, click Operating.
12. Confirm the Master inverter displays 0.00 and the Slaves displays "---" on their front panels.
13. Check for events. If events exist, correct, and then restart Functional Test.
14. Check voltage at AC LOAD terminals of the Master inverter.
15. Switch the AC Load breakers ON.
16. Confirm operation of connected AC loads.

    Note: If oscillation occurs, perform the "XW+/XW Inverter/Charger Multi-Unit AC Output Voltage Configuration and Calibration" in Appendix A of the XW Pro Multi-unit Design Guide (990-91373).
17. Disconnect AC LOAD breakers.
18. Using the Conext Gateway, reduce maximum charge rate.
    a. From the Conext Gateway web application, enable Cascading (if not enabled). With Cascading enabled, a change to a setting in one inverter will automatically ripple through to the other inverter(s) in the system.
    b. In the inverter's Configuration page, under Charger Settings set Maximum Charge Rate to 10%.
    c. Click Apply.
19. Switch AC input breakers ON.
    Note: All inverters in the system must be connected to the same AC input source before they will qualify the source.
20. Confirm both inverters start charging.
    Depending on the battery bank's state-of-charge, the output from one or more inverters may quickly drop to zero. This is considered normal operation.

21. Check for events. If events exist, correct, and then restart the Functional Test.

If the Inverters pass the Functional Test, proceed to the Commissioning procedure as defined in the Owner's Guide.

Wiring a Balanced Three-Phase System

This section provides instructions for wiring the AC and DC connections in the Power Distribution Panel (PDP) and XW Pro for a balanced three-phase system.

Note: Converting from 120 V/240 V split-phase to 120 V single-phase is required if the inverters are used in systems with single-phase (2-wire 120 V) or three-phase (208/120 V) sources. For more information, see *"Converting 120 V/240 V Split-phase to 120 V Single-phase" on page 137*.

Pre-Installation Steps

⚠ ⚠ DANGER

HAZARD OF ELECTRIC SHOCK, EXPLOSION, ARC FLASH, AND FIRE

- Apply appropriate personal protective equipment (PPE) and follow safe electrical work practices. See NFPA 70E or CSA Z462.
- This equipment must only be installed and serviced by qualified electrical personnel.
- Never operate energized with covers removed
- Energized from multiple sources. Before removing covers identify all sources, de-energize, lock-out, and tag-out and wait 5 minutes for circuits to discharge
- Always use a properly rated voltage sensing device to confirm all circuits are de-energized.

Failure to follow these instructions will result in death or serious injury.

⚠ ⚠ DANGER

HAZARD OF ELECTRIC SHOCK, EXPLOSION, ARC FLASH, AND FIRE

- Remove watches, rings, or other metal objects.
- This equipment must only be installed and serviced by qualified electrical personnel.
- Keep sparks and flames away from the batteries.
- Use tools with insulated handles.
- Wear protective glasses, gloves and boots.
- Do not lay tools or other metal parts on top of batteries.

Failure to follow these instructions will result in death or serious injury.

⚠ ⚠ DANGER

HAZARD OF ELECTRIC SHOCK, EXPLOSION, ARC FLASH, AND FIRE

- Battery Circuit Breakers must be installed according to the specifications and requirements defined by Schneider Electric.
- Servicing of batteries must only be performed by qualified personnel knowledgeable of batteries and the required precautions. Keep unqualified personnel away from batteries.
- Disconnect the charging source prior to connecting or disconnecting battery terminals.

Failure to follow these instructions will result in death or serious injury.

Before installing a three-phase system, disconnect all power from the system.

Depending on your installation, you will need to perform the following pre-installation steps:

1. Convert each 120 V/240 V, three-wire, split-phase XW Promodel to single-phase. For more information, see *"Converting 120 V/240 V Split-phase to 120 V Single-phase" on page 137*.
2. Wall-mount XW Pros and PDP. See *Wall-Mounting the XW Pro and PDP on page 32*.
3. Install Conduit Boxes as needed. See *Installing the XW Conduit Box on page 34*.
4. Install AC sync and Xanbus cable(s) as needed. See *"Installing AC sync and Xanbus cables" on page 116*.
5. Remove knockouts on the PDP as needed to accommodate the wiring. See *"Knockout Selection" on page 28* for more information about knockouts.

XW Pro Inverter/Charger Grounding

⚠ WARNING

UNGROUNDED EQUIPMENT

Equipment ground terminals must be reliably connected to ground by appropriately sized grounding conductors. All installations must comply with national and local codes. Consult local and national codes for specific grounding and bonding requirements.

Failure to follow these instructions can result in death, serious injury, or equipment damage.

The XW Pro is provided with ground terminals that must be reliably connected to ground (protective earth) by appropriately sized equipment grounding conductors. System grounding for the AC and DC systems must be done according to all applicable NEC and local installation codes.

For more information about system grounding, see *"Grounding the DC System" on page 52* and *"Grounding AC Equipment" on page 61*.

DC Wiring for a Three-Phase System

Battery cables

Battery cables are not included in the XW Pro package. Depending on your installation requirements, you will need to supply at least one pair of battery cables. For battery cable requirements, see *"Battery Cable Requirements" on page 38*.

Note: One pair of #4/0 AWG Arctic Ultraflex Blue™ battery cables is included with each Power Distribution Panel (PDP) and Connection Kit for INV2 INV3 PDP. For more information, see *"Optional Accessories" on page 18*.

DANGER

HAZARD OF ELECTRIC SHOCK, EXPLOSION, ARC FLASH, AND FIRE

- Apply appropriate personal protective equipment (PPE) and follow safe electrical work practices. See NFPA 70E or CSA Z462.
- This equipment must only be installed and serviced by qualified electrical personnel.
- Never operate energized with covers removed
- Energized from multiple sources. Before removing covers identify all sources, de-energize, lock-out, and tag-out and wait 5 minutes for circuits to discharge
- Always use a properly rated voltage sensing device to confirm all circuits are de-energized.

Failure to follow these instructions will result in death or serious injury.

DANGER

HAZARD OF ELECTRIC SHOCK, EXPLOSION, ARC FLASH, AND FIRE

- Remove watches, rings, or other metal objects.
- This equipment must only be installed and serviced by qualified electrical personnel.
- Keep sparks and flames away from the batteries.
- Use tools with insulated handles.
- Wear protective glasses, gloves and boots.
- Do not lay tools or other metal parts on top of batteries.

Failure to follow these instructions will result in death or serious injury.

⚠ ⚠ DANGER

HAZARD OF ELECTRIC SHOCK, EXPLOSION, ARC FLASH, AND FIRE

- Battery Circuit Breakers must be installed according to the specifications and requirements defined by Schneider Electric.
- Servicing of batteries must only be performed by qualified personnel knowledgeable of batteries and the required precautions. Keep unqualified personnel away from batteries.
- Disconnect the charging source prior to connecting or disconnecting battery terminals.

Failure to follow these instructions will result in death or serious injury.

⚠ WARNING

OVERHEATING OF DC TERMINALS AND CABLES

Overheating of the DC terminals or DC cables to dangerous temperatures may occur due to improper installation.

- Do not put anything between the cable lug and the terminal surface.
- Do not over-tighten connections; observe all recommended torque values.
- Do not apply any type of anti-oxidant paste until after the cable connection is tightened.
- Do not under size cables; install cables sized in accordance with national electrical code requirements.
- DC cables must have crimped copper compression lugs or crimped and soldered copper compression lugs; soldered connections alone are not acceptable. Lugs must be rated for use with fine-stranded cable.
- Do not use coarse-stranded cable; the lack of flexibility may pull DC terminal connections loose.

Failure to follow these instructions can result in death, serious injury, or equipment damage.

For more information about battery cables, see *Connecting Battery Cables on page 55*.

Note: When making DC connections, be sure to observe correct hardware stacking and proper polarity, and ensure that nothing obstructs the connection between the terminal surface and the battery cable lug, see *Figure 28 on page 57*.

DC Grounding

See *"Grounding the DC System" on page 52*.

DC Positive Bus Bar installation

1. Remove the existing bus bar from the bottom terminal of the GJ250A 160 VDC, 3/8" stud DC disconnect/breaker (pre-installed in the PDP).
2. Install a second and third GJ250A - DC rated breaker (included with each Connection Kit for INV2 INV3 PDP) next to the existing DC disconnect/breaker.

3. Install the DC positive bus bar included with the Connection Kit for INV2 INV3 PDP. This DC positive bus bar supports up to three GJ250A - DC rated breakers.
4. Remove the appropriate knockout from the Power Distribution Panel (PDP) lower faceplate.

Note: Replace faceplates after AC and DC wiring is complete.

DC Wiring for a Balanced Three-Phase System

Note: One pair of battery cables is included with each Connection Kit for INV2 INV3 PDP and Power Distribution Panel (PDP).

1. Using the instructions provided in *"Making DC Connections" on page 55*, make DC connections from the Power Distribution Panel (PDP) to:
   a. the first XW Pro Inverter/Charger (INV1) and
   b. the battery bank.

Note: Before connecting the DC cables from the PDP to the battery, perform the procedures in *"AC Wiring for a Three-Phase System" on page 101*.

2. Connect the positive battery cable for INV2 (included with the Power Distribution Panel (PDP)) to the top terminal on the second DC disconnect/breaker.
3. Connect the negative battery cable for INV2 (included with the Connection Kit for INV2 INV3 PDP) to the DC Negative Bus.
4. Connect the positive battery cable to the positive terminal on the second XW Pro (INV2) and the negative battery cable to the negative terminal on INV2.
5. Connect the positive battery cable for INV3 (included with the Connection Kit for INV2 INV3 PDP) to the top terminal on the third DC disconnect/breaker.
6. Connect the negative battery cable for INV3 (included with the Connection Kit for INV2 INV3 PDP) to the DC Negative Bus.
7. Connect the positive battery cable to the positive terminal on INV3 and the negative battery cable to the negative terminal on INV3.

Figure 51 Three-Phase DC Wiring

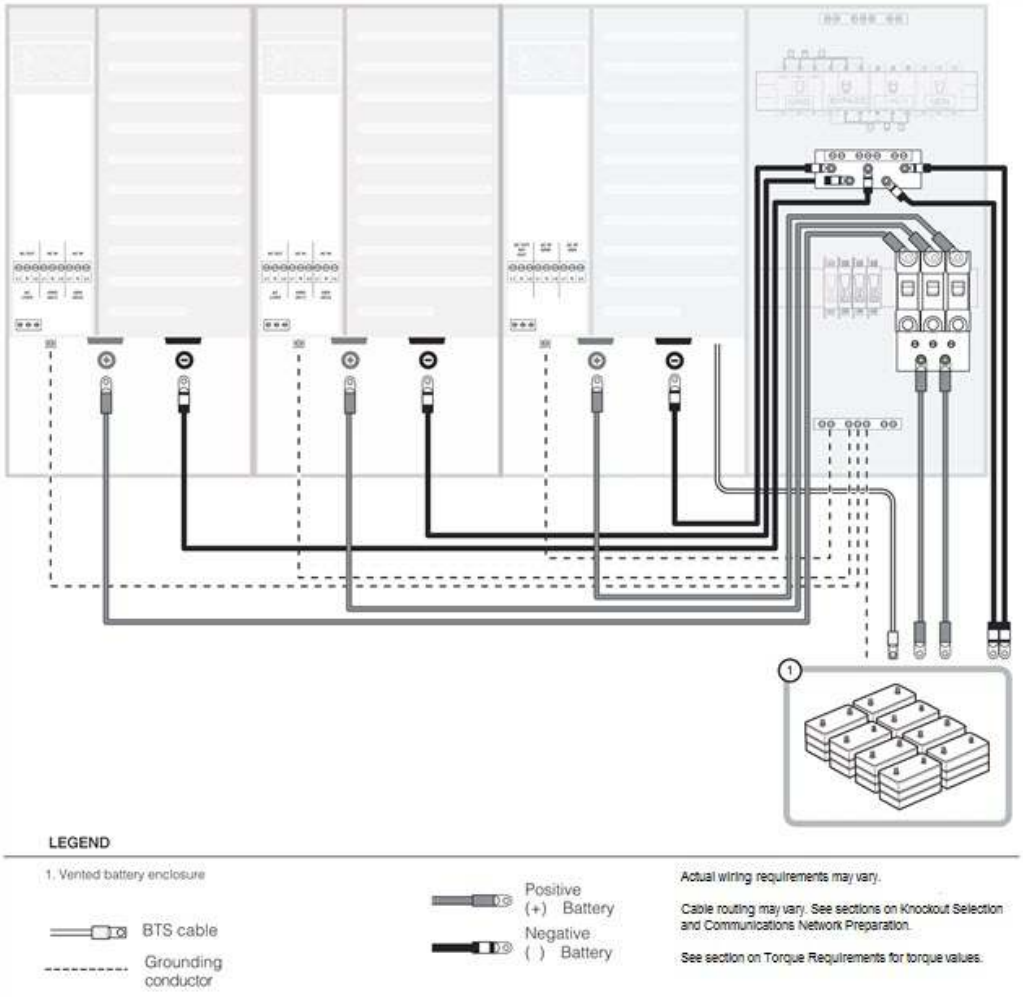

AC Breaker Installation

1. Remove all connections to the utility grid, generator, inverter load sub-panel, and XW Pro.
2. Remove the pre-installed breakers from the PDP, and mount the 3-pole, 60 A, 120/208 VAC breakers (included in the Conext 3 Phase Breaker Kit) onto the DIN rail.
3. In the PDP, attach six two-tab power distribution jumpers in the AC breaker positions as shown in *Figure 52* .

Figure 52 Power Distribution Jumper Installation (Three-Phase)

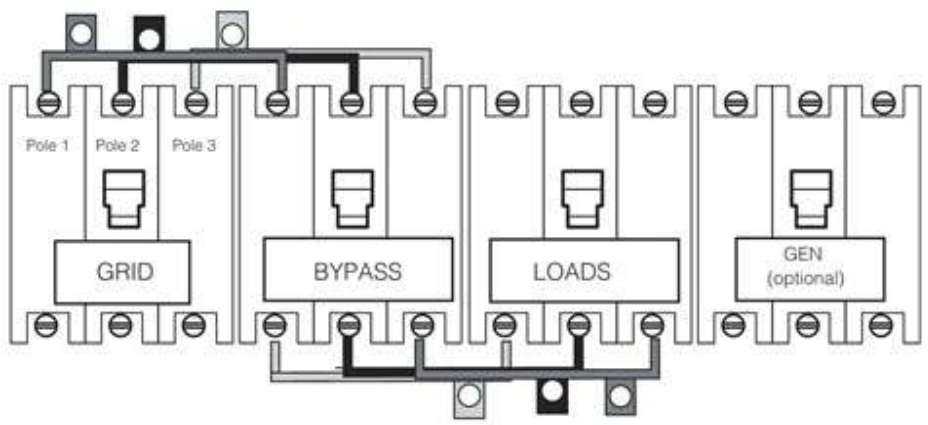

4. Connect the AC wiring as shown in *Figure 53* .

Figure 53 PDP Three-Phase AC Wiring

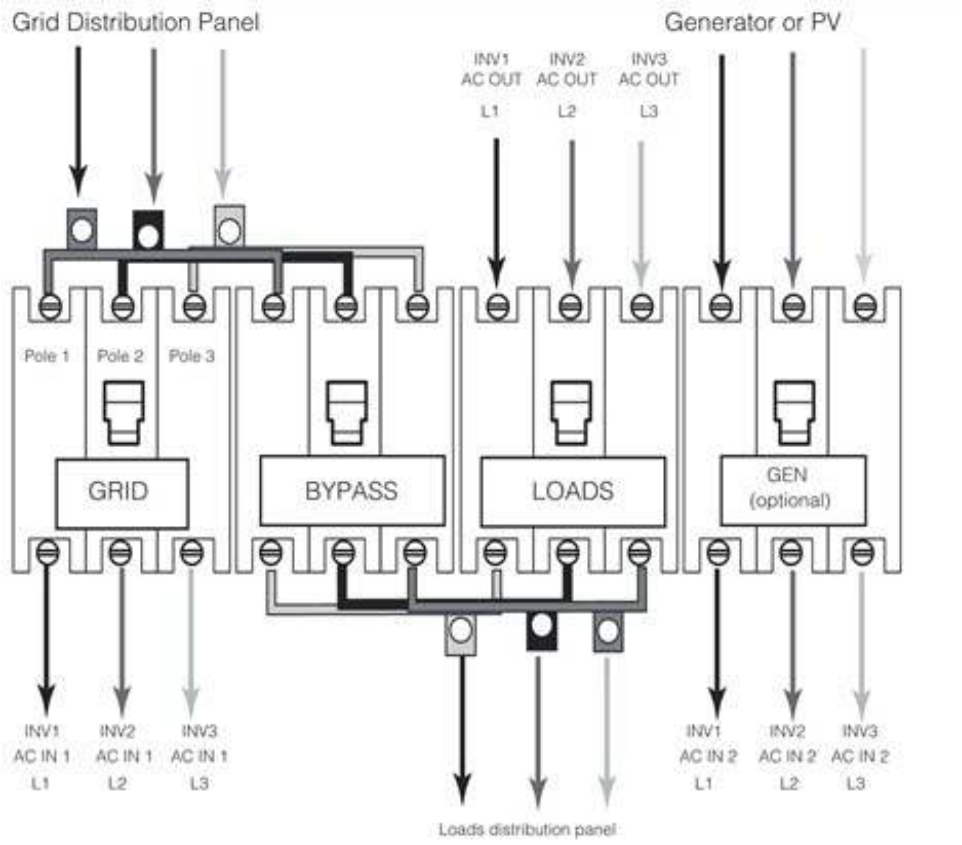

AC Equipment Grounding

See *"Grounding AC Equipment" on page 61*.

AC Wiring for a Three-Phase System

To connect the Conext Power Distribution Panel (PDP) to the XW Pros:

1. Connect the L1 AC wiring from each pole on the GRID breaker to the corresponding AC Input (AC1) terminal on each of the XW Pro units.
2. Connect the L1 AC wiring from each pole on the LOAD breaker to the corresponding AC OUT terminal on each of the XW Pro units.
3. Connect the L1 AC wiring from the LOADS breaker jumpers to the AC LOADS panel.
4. Connect the L1 AC wiring from the utility grid distribution panel to the GRID breaker jumpers.
5. If the installation includes a generator or second AC source, connect the L1 AC wiring from each pole on the GEN breaker to the corresponding AC Input (AC2) terminal on each of the three XW Prounits.

To connect the XW Pro units to each other:

1. Connect the AC Wiring in the master inverter/charger (INV1) terminal block. See *Figure 54* . Connect INV2 and INV3 the same way, ensuring that each pole of the three-phase WYE system (L1, L2, L3) gets connected to the respective inverter (INV1, INV2, INV3).

Figure 54 Inverter/Charger Three-Phase AC Wiring

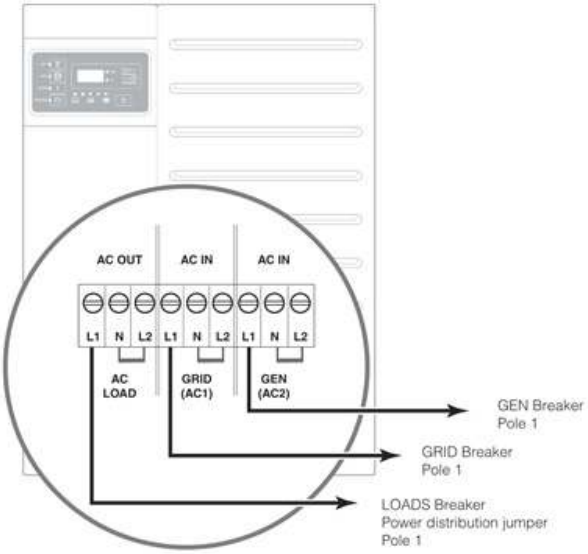

2. Connect neutral wiring from INV1, INV2, and INV3 to the neutral bus bar on the PDP.
3. Connect ground wiring from INV1, INV2, and INV3 to the ground bus bar on the PDP.
4. Using the labels included with the PDP, re-label the AC breakers as appropriate.
5. Install the bypass interlock plate, as shown in figure *Figure 55 on page 102*.

Bypass Interlock Plate Installation (Three-Phase)

To install the custom designed bypass interlock plate:

1. Replace the upper and lower faceplates on the PDP.
2. Place the bypass interlock plate over the breakers, as shown in *Wiring the XW Pro with a PDP*, and secure it in place with the hardware provided.
3. To set it in Normal position, slide the bypass plate to the right, as shown in *Wiring the XW Pro with a PDP*.

Figure 55 Installing the Custom Designed Three-phase Bypass Interlock Plate

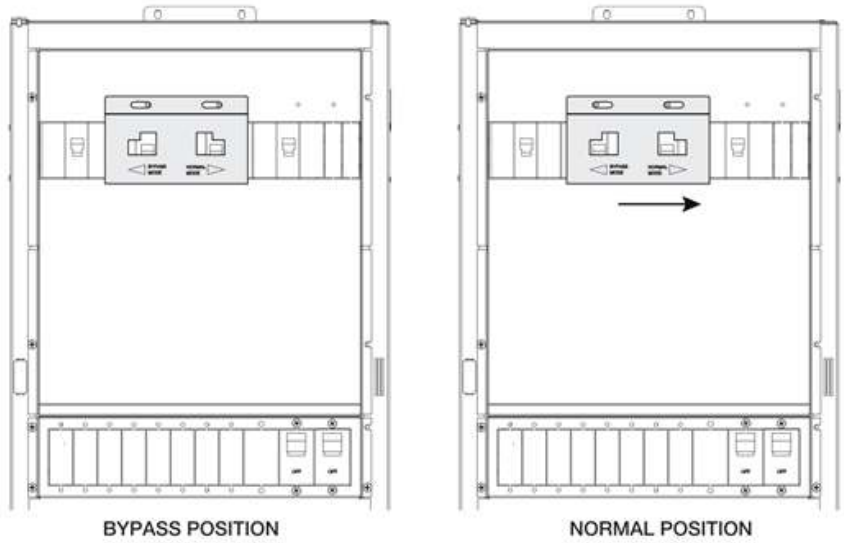

Wiring the XW Pro Inverter/Charger without a PDP

⚠ ⚠ DANGER

HAZARD OF ELECTRIC SHOCK, EXPLOSION, ARC FLASH, AND FIRE

- Apply appropriate personal protective equipment (PPE) and follow safe electrical work practices. See NFPA 70E or CSA Z462.
- This equipment must only be installed and serviced by qualified electrical personnel.
- Never operate energized with covers removed
- Energized from multiple sources. Before removing covers identify all sources, de-energize, lock-out, and tag-out and wait 5 minutes for circuits to discharge
- Always use a properly rated voltage sensing device to confirm all circuits are de-energized.

Failure to follow these instructions will result in death or serious injury.

DANGER

HAZARD OF ELECTRIC SHOCK, EXPLOSION, ARC FLASH, AND FIRE

- Remove watches, rings, or other metal objects.
- This equipment must only be installed and serviced by qualified electrical personnel.
- Keep sparks and flames away from the batteries.
- Use tools with insulated handles.
- Wear protective glasses, gloves and boots.
- Do not lay tools or other metal parts on top of batteries.

Failure to follow these instructions will result in death or serious injury.

DANGER

HAZARD OF ELECTRIC SHOCK, EXPLOSION, ARC FLASH, AND FIRE

- Battery Circuit Breakers must be installed according to the specifications and requirements defined by Schneider Electric.
- Servicing of batteries must only be performed by qualified personnel knowledgeable of batteries and the required precautions. Keep unqualified personnel away from batteries.
- Disconnect the charging source prior to connecting or disconnecting battery terminals.

Failure to follow these instructions will result in death or serious injury.

This section provides illustrations for wiring the AC and DC connections for a XW Prowithout a Power Distribution Panel (PDP).

Pre-Installation Steps

Depending on your installation, you will need to perform some or all of some the following pre-installation steps:

1. Prepare the battery bank. See *"Battery Bank Preparation" on page 37*.
2. Wall-mount the XW Pros. See *Wall-Mounting the XW Pro and PDP on page 32*.
3. Install Conduit Boxes as needed. See *Installing the XW Conduit Box on page 34*.
4. Install AC sync and Xanbus cable(s) as needed. SeeSee *"Installing AC sync and Xanbus cables" on page 116*.
5. Remove knockouts on the PDP as needed to accommodate the wiring. See *"Knockout Selection" on page 28* for more information about knockouts.

Feed-in Protection Requirements

NOTICE

OVERLOADING THE DISTRIBUTION PANEL

The amount of power that can be fed into a distribution panel and the means and location for feed-in, must be in accordance with NEC 2017 article 690.64 or the current requirements of the local electrical code.

Failure to follow these instructions can result in equipment damage.

XW Pro Inverter/Charger Grounding

⚠ WARNING

UNGROUNDED EQUIPMENT

Equipment ground terminals must be reliably connected to ground by appropriately sized grounding conductors. All installations must comply with national and local codes. Consult local and national codes for specific grounding and bonding requirements.

Failure to follow these instructions can result in death, serious injury, or equipment damage.

The XW Pro is provided with ground terminals that must be reliably connected to ground (protective earth) by appropriately sized equipment grounding conductors. System grounding for the AC and DC systems must be done according to all applicable NEC and local installation codes.

For more information about system grounding, see *"Grounding the DC System" on page 52* and *"Grounding AC Equipment" on page 61*.

Grounding the DC System

To connect the XW Pro to the DC grounding system, use the ground lug at the bottom of the XW Pro chassis (see *Figure 2 on page 18*). The terminal accepts wires from #14 AWG (1.63 mm) to #2AWG (6.54 mm).

System grounding for the DC system, which typically involves bonding (connecting) the battery negative circuit to ground, is dependent on the system configuration.

Note: If a grounded DC system is required, ensure that the system bonding is done in one location only, and that all conductors and connections comply with all applicable NEC and local installation codes.

Figure 56 Grounding the DC System (No PDP)

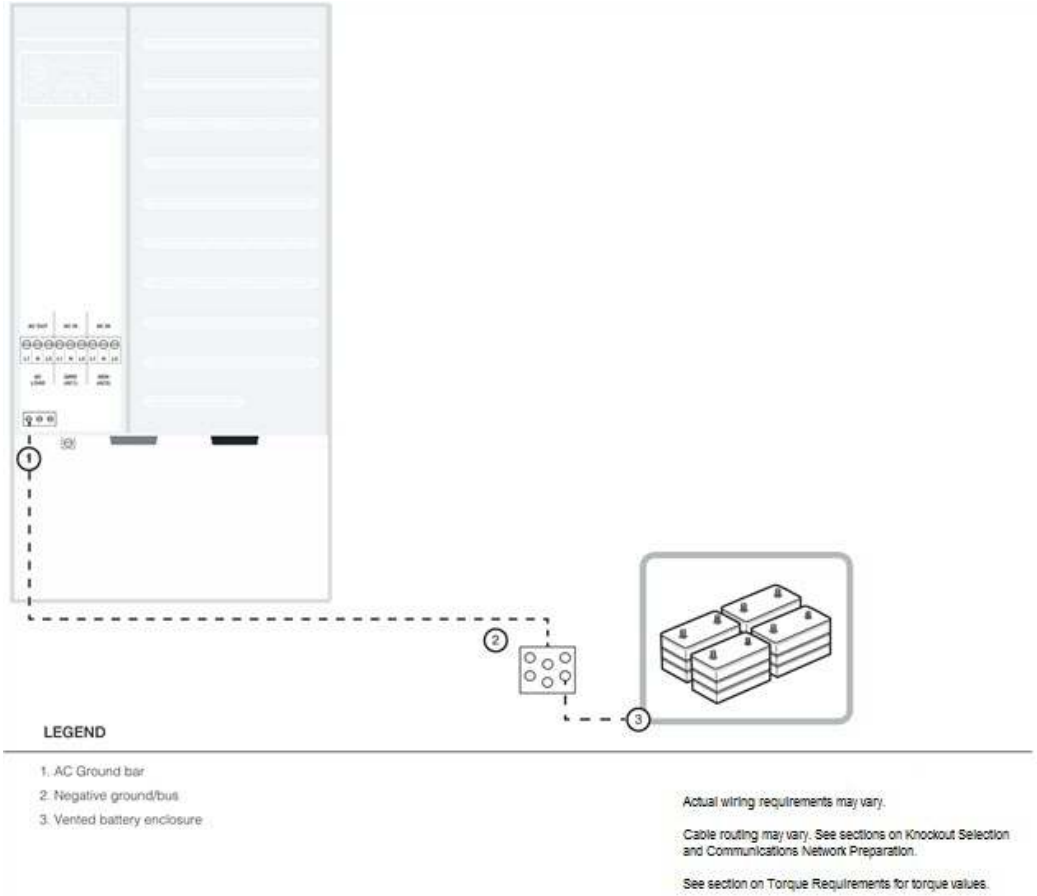

Figure 57 DC Connections to a Single Inverter (No PDP)

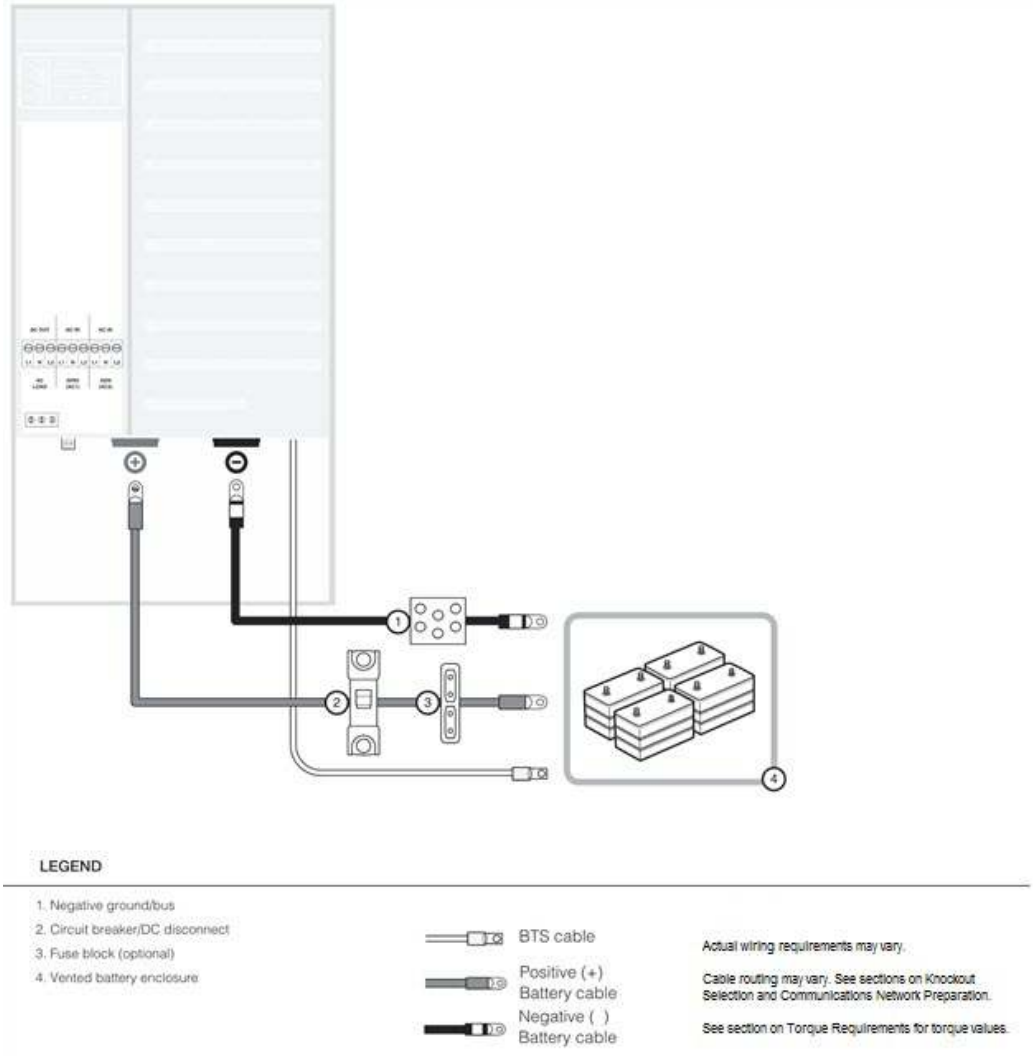

Figure 58 Grounding the AC System (No PDP)

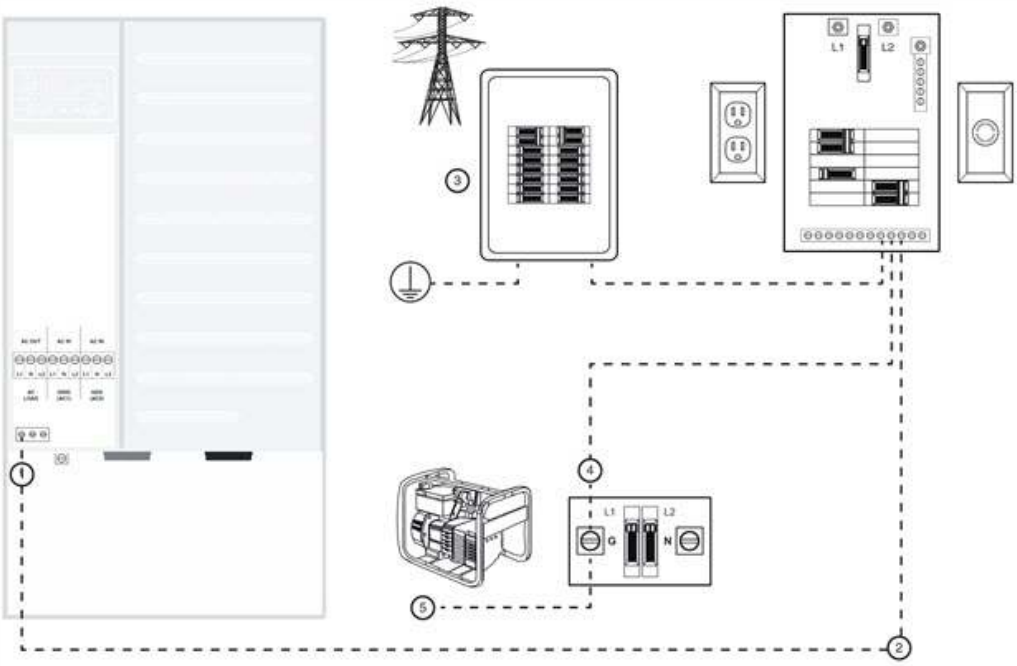

LEGEND

1. To AC ground bar
2. To inverter load sub-panel
3. To main utility panel
4. Generator disconnect

Note: Depending on the location of the generator and local code requirements, the generator disconnect may be located in the power distribution panel.

5. To AC generator

Actual wiring requirements may vary.

Cable routing may vary. See sections on Knockout Selection and Communications Network Preparation.

See section on Torque Requirements for torque values.

Figure 59 AC Output Wiring to the Inverter Load Sub-Panel (No PDP)

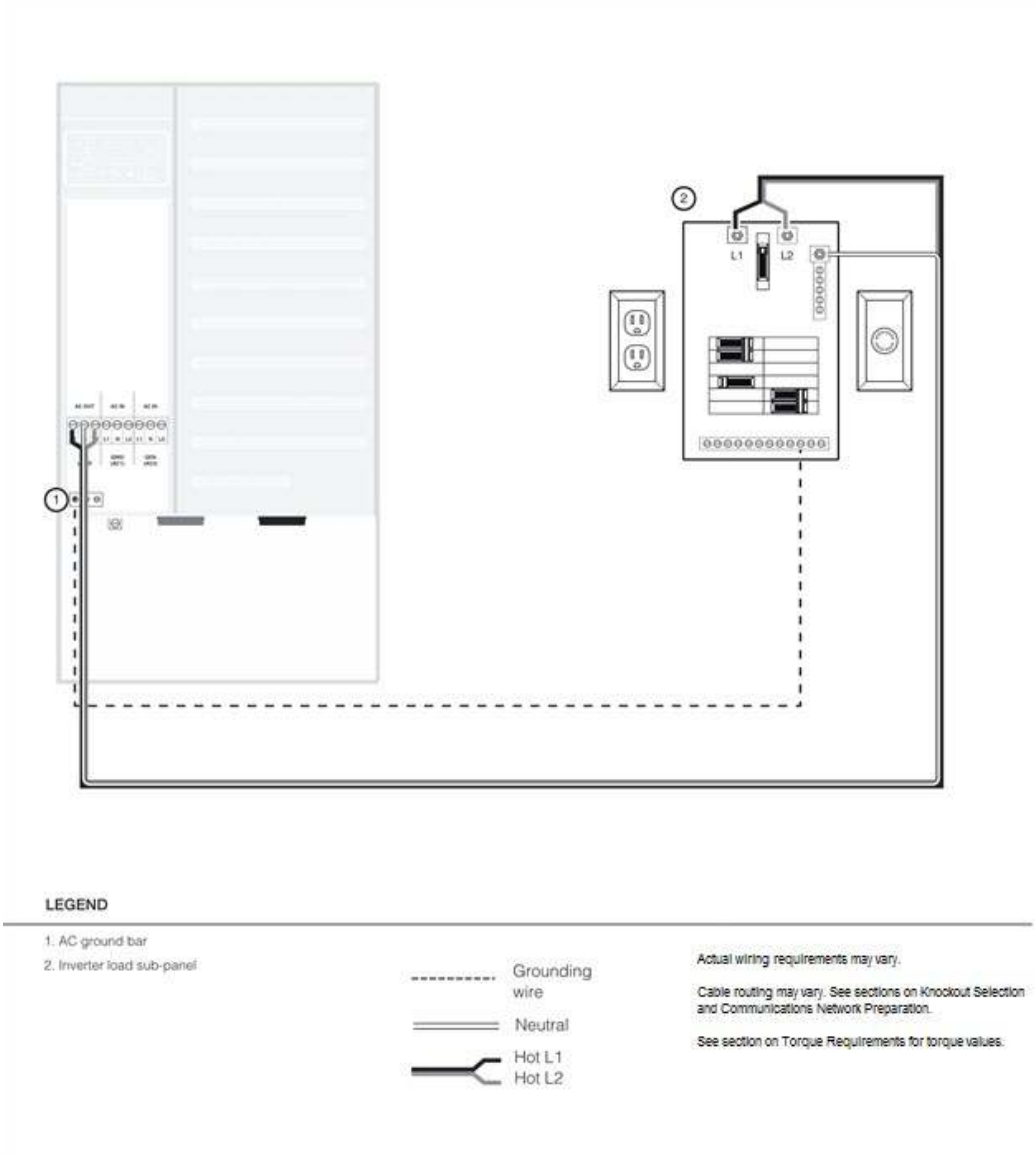

Figure 60 Generator Wiring directly to the Inverter (No PDP)

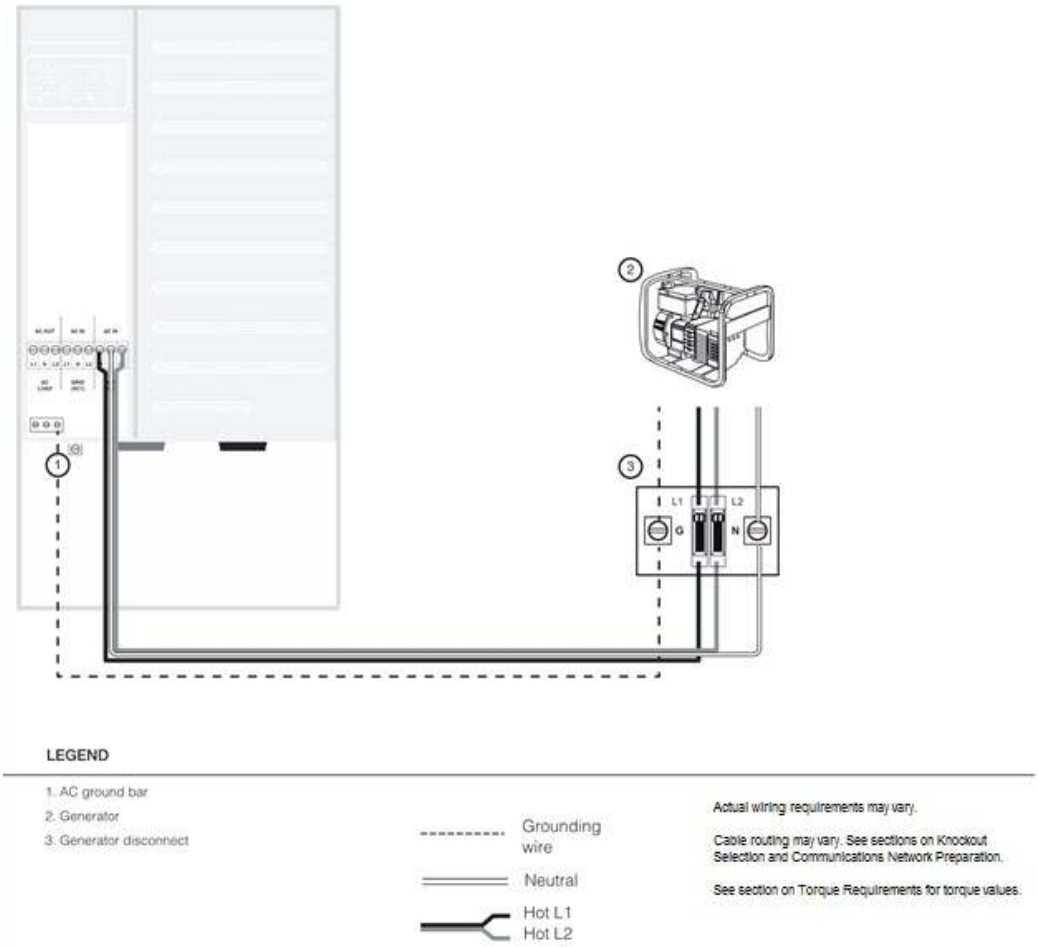

Figure 61 Utility Wiring to the Inverter Input (No PDP)

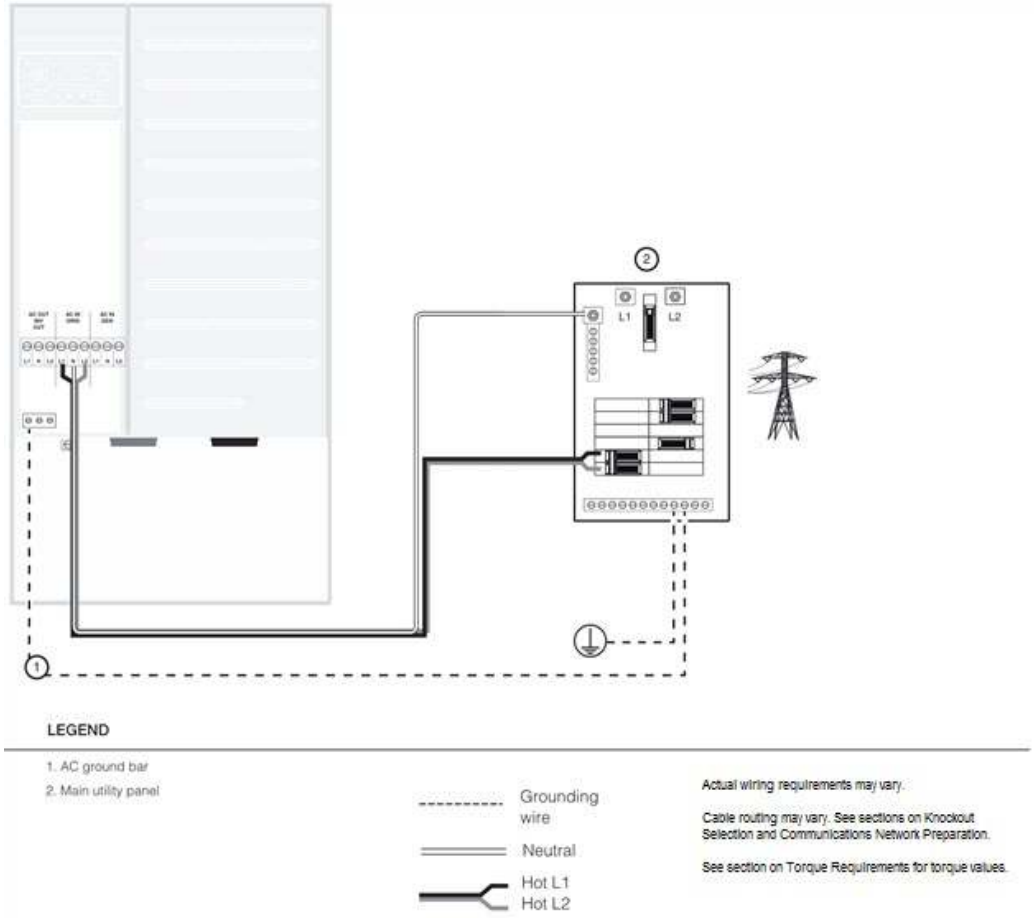

4 Communication

What's in This Chapter?

The Xanbus Network ***113***
Network Components *113*
Installing the Network ***116***
Before You Begin the Installation *116*
Installation Tools and Materials *116*
Installing AC sync and Xanbus cables *116*
Guidelines for Routing the Xanbus Cables *118*

The Xanbus Network

A Xanbus network is a collection of Xanbus enabled devices that perform individual functions, but also communicate and interact with other devices on the network. The network capability of the XW Pro provides a solution that simplifies and automates the installation, configuration, control, monitoring, and integration of devices.

Network Components

NOTICE

SHORT CIRCUIT OF NETWORK COMPONENTS

- **This network is not an ethernet system.** Only connect Xanbus-enabled devices to other Xanbus-enabled devices. Do not attempt to connect Xanbus-enabled devices to other networks or systems.
- Ethernet crossover cables are not compatible with the Xanbus system. Use Category 5 (CAT 5 or CAT 5e) cables to connect Xanbus-enabled devices.
- Do not install network terminators in an AC Sync port.

Failure to follow these instructions can result in equipment damage.

A Xanbus network consists of three elements: Xanbus-enabled devices, Xanbus power supply, and Xanbus cables.

Each device is integrated into the network using cables, network connectors, and terminators. An example of a network system is shown in *Figure 62* .

Figure 62 Xanbus Network System (Example)

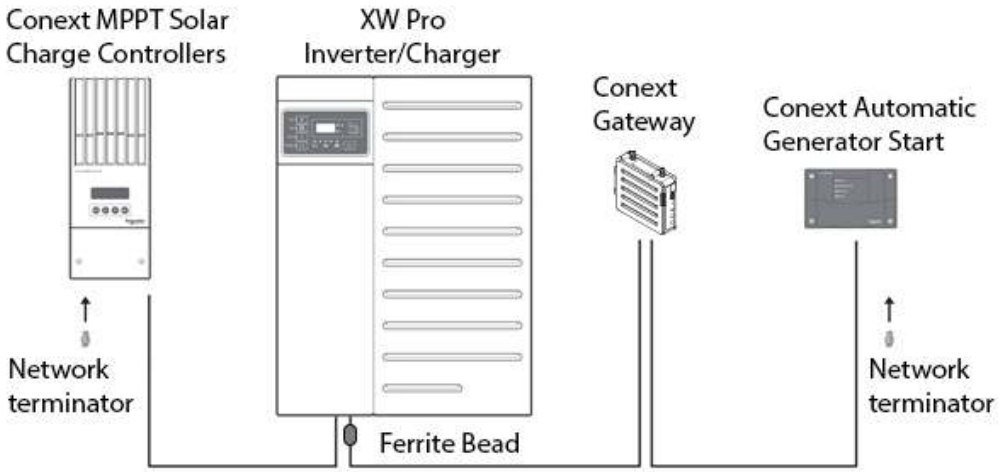

Power Distribution Panel (without AC Breakers)-enabled Devices

A Xanbus-enabled device is any product that works on a Xanbus network. Below are some examples of Xanbus-enabled devices:

- Conext Gateway
- XW Pro

- Conext AGS
- Conext Battery Monitor
- Conext MPPT solar charge controller MPPT 60 150
- Conext MPPT solar charge controller MPPT 80 600

Due to network traffic, the maximum number of XW Pro units in a single Xanbus network should not exceed twelve. The maximum number of Conext MPPT Solar Charge Controllers in a single Xanbus network should not exceed twelve.

The combined maximum number of XW Pro units and Conext MPPT Solar Charge Controllers should not exceed twelve.

Xanbus Power Supply

Xanbus-enabled devices are either power-supplying or power-consuming. The Xanbus network needs at least one device with a power supply sufficient to run the entire network.

Note: The total network current supplied by the power-sourcing devices must be equal to or greater than the total current drawn by the power-consuming devices. The power supply must be capable of providing 15 VDC/200 mA to each device.

For example, in a system with a XW Pro, Conext Gateway, and Conext AGS, the XW Pro is a power-supplying device capable of providing 800 mA at 15 VDC while the two other devices each consume a maximum of 200 mA for a total maximum consumption of 400 mA. In this example, the network is properly configured from a power perspective because the power source is capable of providing more current than is needed: 800 mA > 400 mA.

Note: See the specifications for each Xanbus-enabled device to determine how much power each device consumes or supplies.

Xanbus Cables

Each Xanbus-enabled device is connected by a Category 5 (CAT 5 or CAT 5e) cable, a standard cable available from the manufacturer or any computer supply store. The cable consists of eight conductors in four twisted pairs with an RJ45 modular connector wired to the T568A standard. The minimum cable length should be 6 ft. (1.8 m).

Figure 63 Xanbus Cable

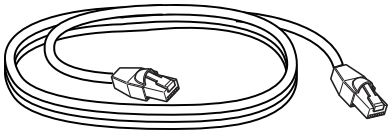

Network Terminators

The Xanbus network must be properly terminated at each end to help ensure the communication signal quality on the network.

Note: If the network is not properly terminated, signal quality is degraded and performance on the network is reduced. Permanent configuration without terminators is not supported.

The XW Pro and other Xanbus-enabled devices ship with one network terminator. Depending on your network layout, this terminator may need to be removed from the XW Pro Inverter/Charger and inserted into another device elsewhere in the network.

Figure 64 Network terminator

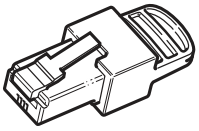

Xanbus Clip-on Ferrite Bead

A clip-on ferrite bead is included to aid in suppressing high frequency electrical noise on the Xanbus network. For optimal results, place the ferrite bead as close to the XW Pro ports as possible.

Installing the Network

Note: Installing and replacing Xanbus-enabled devices in an existing system must be performed with the XW Pro in standby mode. For more information about standby mode, see the Owner's Guide.

Before You Begin the Installation

- Read the entire section before installing the network. It is important to plan the installation from beginning to end.
- Assemble all the tools and materials required for the installation.

Installation Tools and Materials

Tools

A Phillips head screwdriver, appropriately sized is required to install the Xanbus cables.

Materials

The following materials may be required to complete the installation.

- CAT 5 or CAT 5e cables (available from computer supply stores)
- Terminators

Note: Mount cables and network connectors in a dry location.

Installing AC sync and Xanbus cables

The AC sync cable connects each inverter and provides the necessary communication and control between multiple units. Install these cables, routing them through the Conduit Box raceway, prior to making the AC and DC wiring connections.

Note: If you are installing a Xanbus-enabled device on an existing Xanbus system, put the system in standby mode by holding the STARTUP/SHUTDOWN and Equalize buttons for 5 seconds, or via the Conext Gateway web application.

Figure 65 XW Pro communication ports

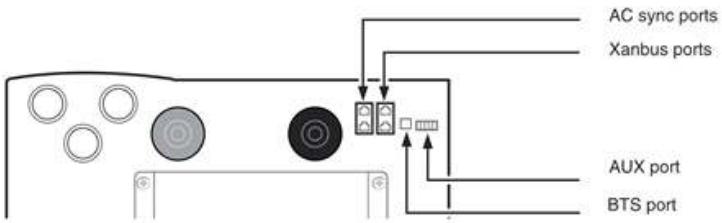

To install the AC sync and Xanbus cables:

1. Remove the two raceways for the communication cabling by removing the screw holding each raceway in place, as shown in *Figure 66* .

Figure 66 Conduit Box Raceways

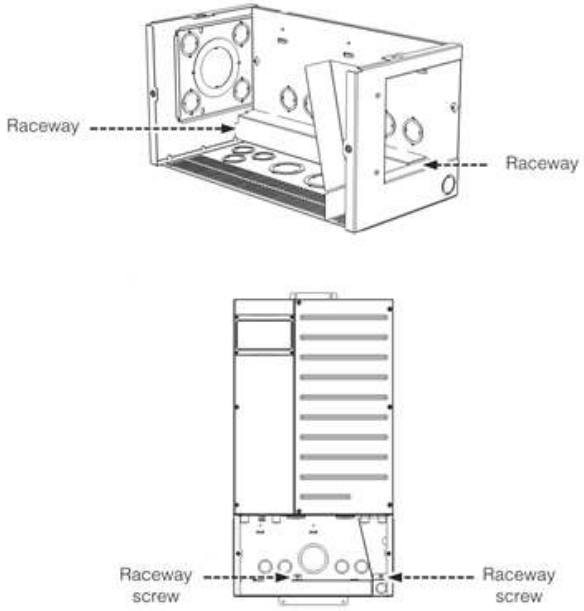

2. Insert the RJ45 jack on the cable into one of the two AC Sync ports.
3. Route the cable as shown in *Figure 67* . Route any additional communication cables through the raceways. Replace the wiring raceways, ensuring not to pinch the cables. Secure the raceways to the Conduit Box with the screw that was removed earlier.

Figure 67 Installing the AC sync and Xanbus Cables

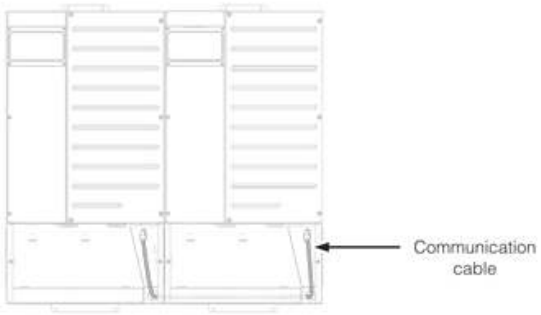

Note: In a dual-inverter system, install an AC Sync Cable from INV1 to INV2. In a triple-inverter system, daisy-chain an AC Sync Cable from INV1 to INV2 and from INV2 to INV3.

Guidelines for Routing the Xanbus Cables

⚠ WARNING

XANBUS SHOCK HAZARD

Xanbus cables in contact with DC or AC power can transmit an electric shock. Do not route the Xanbus cables in the same conduit or panel as the AC and DC power cabling.

Failure to follow these instructions can result in death, serious injury, or equipment damage.

To help ensure maximum performance of your network, follow these guidelines when routing the Xanbus cables.

- Route the cables away from sharp edges that might damage the insulation. Avoid sharp bends in the cable—no less than a 4-inch (100 mm) radius.
- Allow at least 2 ¼ inches (57 mm) of space behind the wall to accommodate the depth of the unit and allow room for the cables to bend.
- Allow for some slack in the cable tension.
- Keep the alignment of wire pairs inside the sheath as straight as possible.
- Allow separation between data and power cables (data cables should only cross over a power cable at right angles).
- Avoid using metal cable staples. Use appropriate hardware fasteners to avoid damage to the cable.
- Support horizontal cables using J hooks or cable trays.

The total length of the network, including all connected Xanbus-enabled devices and the XW Pro, cannot exceed 130 feet (40 m).

5 Access Installation

What's in This Chapter?

Conext Gateway Installation ***121***
Installing the Conext Gateway via the Xanbus Network *121*
Verifying the Installation *122*

Conext Gateway Installation

The XW Pro can be controlled remotely by connecting a Conext Gateway.

The Conext Gateway allows access to programming features of the XW Pro and allows the system to be modified to specific installation requirements.

The Conext Gateway can be connected to the XW Pro via the Xanbus network.

Installing the Conext Gateway via the Xanbus Network

⚠ WARNING

IGNITION AND FIRE HAZARD

- This equipment is not ignition protected. To prevent fire or explosion, do not install this product in locations that require ignition-protected equipment. This includes any confined space containing vented batteries, or flammable chemicals such as, natural gas (NG), liquid petroleum gas (LPG) or gasoline (Benzine/Petrol).
- Do not install in a confined space with machinery powered by flammable chemicals, or storage tanks, fittings, or other connections between components of fuel or flammable chemical systems.
- Do not install the inverter near readily flammable materials such as cloth, paper, straw, or plastic sheeting. Keep flammable materials a minimum distance of 600 cm (24 in.) from the top surface and 30 cm (12 in.) from either side surface and the front of the XW Pro Inverter/Charger.

Failure to follow these instructions can result in death, serious injury, or equipment damage.

The Conext Gateway is connected to the Xanbus network via either of the two Xanbus network ports located at the bottom of the XW Pro chassis (as shown in *Figure 68*).

Figure 68 Xanbus Port Locations

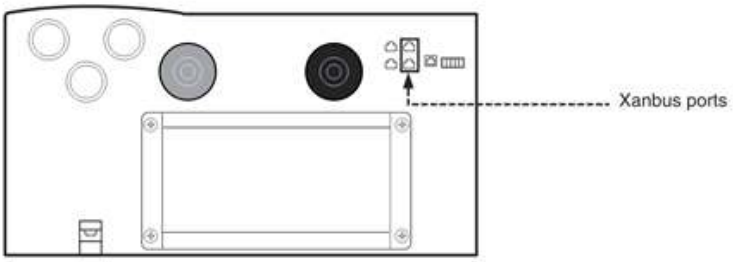

For more information about installing a Xanbus-enabled device as part of a network system, see *"The Xanbus Network" on page 113*.

For wall-mounting and other installation instructions, see the Conext Gateway Owner's Guide (975-0806-01-01).

Verifying the Installation

If network power (from an inverter/charger) is present, the Conext Gateway LEDs will illuminate. For more information, see the *XW Pro Owner's Guide*.

6 Specifications

What's in This Chapter?

Electrical Specifications ***125***
Mechanical and Regulatory Specifications ***127***
Regulatory Approvals ***128***
Grid Support Utility Interactive Functions *129*

This chapter provides the electrical and mechanical specifications for the XW Pro.

DISCLAIMER REGARDING STATUS DATA

Status data reported by the XW Pro are approximate values intended to provide general and non-exact information about the XW Pro. Under no circumstances should this status data be used for precise evaluation of the XW Pro system performance, including efficiency considerations. In systems with a single XW Pro, the measurement capabilities of the inverter/charger allow for deviations of up to 5% of actual values. In systems with multiple inverter/charger units, the compounded effect of accuracy deviations in the status data could result in aggregated deviations exceeding 5% of actual values. For systems requiring higher accuracy status reporting of ac parameters, Schneider Electric recommends the use of external monitoring equipment of appropriate and accurate calibration. for higher accuracy measurement of dc (battery) parameters, Schneider Electric recommends installing an appropriate dc battery monitor in the system.

Electrical Specifications

NOTE: Specifications are subject to change without prior notice.

Table 13XW Pro Electrical Specifications

Specification	XW Pro 6848 NA (120/240 VAC)	XW Pro 6848 NA (120 VAC)
Continuous Output Power (Inverter Mode @ 25°C)	6,800 W	5,760 W
Continuous Output Power (Inverter Mode @ 40°C)	6,000 W	5,760 W
Surge Rating (Overload for 1 minute)	12,000 W	12,000 W
Surge Rating (Overload for 30 minutes)	8,500 W	7,200 W
Waveform	True Sine Wave	True Sine Wave
Idle Consumption - Inverter Mode, no load	28 W	28 W
Idle Consumption - Search Mode	< 8 W	< 8 W
DC Input Voltage Range	40–64 VDC, 48 VDC nominal	40–64 VDC, 48 VDC nominal
DC Current at Rated Continuous Power (Inverter Mode)	180 A	180 A
Maximum Charge Rate (Charger Mode)	140 A	120 A
Power Factor Corrected Charging	PF 0.98	PF 0.98
Compatible Battery Types	Flooded (default), Gel, AGM, Lithium ion, custom	Flooded (default), Gel, AGM, Lithium ion, custom
AC Output Voltage	120/240 V ± 3%	120 V ± 3%

Specification	XW Pro 6848 NA (120/240 VAC)	XW Pro 6848 NA (120 VAC)
AC Continuous Output Current (Inverter Mode)	L-L: 28 A	L-L: 48 A
AC Continuous Output Current, Imbalanced line loading on L1-N or L2-N (Inverter Mode)	L-N: 40 A	N/A
Surge Current (Inverter Mode)	52 A_{RMS} for 60 seconds (240 V nominal)	104 A_{RMS} for 60 seconds (120 V nominal)[1]
AC Input Voltage Range (Bypass/Charger Mode)[2]	156–280 VAC (240 V nominal)	78–140 VAC (120 V nominal)
AC Input Frequency Range (Bypass/Charger Mode)	52–68 Hz (default) 44-70 Hz (allowable)	52–68 Hz (default) 44-70 Hz (allowable)
AC Input Maximum Breaker Capacity	60 A maximum, double-pole	60 A maximum, double-pole
AC Output Maximum Breaker Capacity	60 A maximum, double-pole	60 A maximum
AC1 (Grid) Input Current	3–60 A	3–60 A
AC2 (Generator) Input Current	3–60 A	3–60 A
AC Output Frequency	60.0 ± 0.1 Hz	60.0 ± 0.1 Hz
Total Harmonic Distortion	< 5% at rated power	< 5% at rated power
Automatic Transfer Relay Capacity & Typical Transfer Time	60 A / 8 ms	60 A / 8 ms
Auxiliary Relay Output	0–12 VDC, maximum 250 mA	0–12 VDC, maximum 250 mA
Grid Sell Current (Selectable Limit)	0–27 A_{RMS}	0–48 A_{RMS}
Grid Sell Power	6,000 W	5,760 W
Peak Efficiency	95.1%	94.8%
CEC Weighted Efficiency	94.1%	93.6%

[1] Limited by the max. 60 A breaker to connect the inverter to other equipment.

[2] Operation is specific to the active grid code.

Mechanical and Regulatory Specifications

NOTE: Specifications are subject to change without prior notice.

Table 14 XW Pro Mechanical Specifications

Model	XW Pro 6848 NA
Non-Volatile Memory	Yes
Inverter Information Panel	Status LEDs indicate AC In status, events/warnings, equalize mode, battery level. 3-character display indicates output power or charge current, event/warning codes. STARTUP/SHUTDOWN and equalize button
Multiple Unit Configurations	Up to 3 parallel units in 120/240 three-wire configuration. Electrically, up to 4 parallel units can be connected and operated.
System Network	Conext Xanbus™ (publish-subscribe network, no need for hubs or special cards)
Emissions	FCC Part 15, Class B Industry Canada ICES-003 Issue 5, Class B
Regulatory approvals	CSA C22.2 No. 107.1-01 - General Use Power Supplies UL 1741 - 2nd Ed - Inverters, Converters, Controllers and Interconnection System Equipment California tariff Rule 21-compliant and certified to UL1741SA
Enclosure Type	NEMA Type 1—Indoor
Rated Temperature Range (meets specifications)	32–77 °F (0–25 °C)
Operational Temperature Range	-13–158 °F (-25–70 °C)
Storage Temperature Range	-40–185 °F (-40–85 °C)
Operational Humidity Range	5 – 95 % Non-Condensing
Altitude	Sea level up to 2000 m
Inverter Dimensions (H × W × D)	23 × 16 × 9" (586 × 406 × 230 mm)

Model	XW Pro 6848 NA
Shipping Dimensions (H × W × D)	28 × 22 ½ × 15 ½” (711 × 572 × 394 mm)
Inverter Weight	122 lb (55.5 kg)
Shipping Weight	132 lb (60 kg)

Figure 69 XW Pro Dimensions

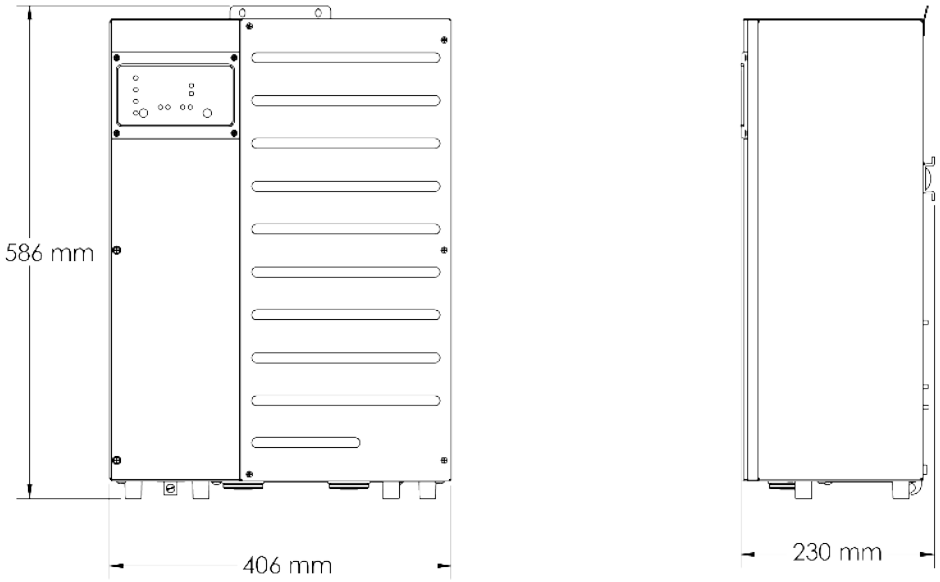

Figure 70 XW Pro Block Diagram

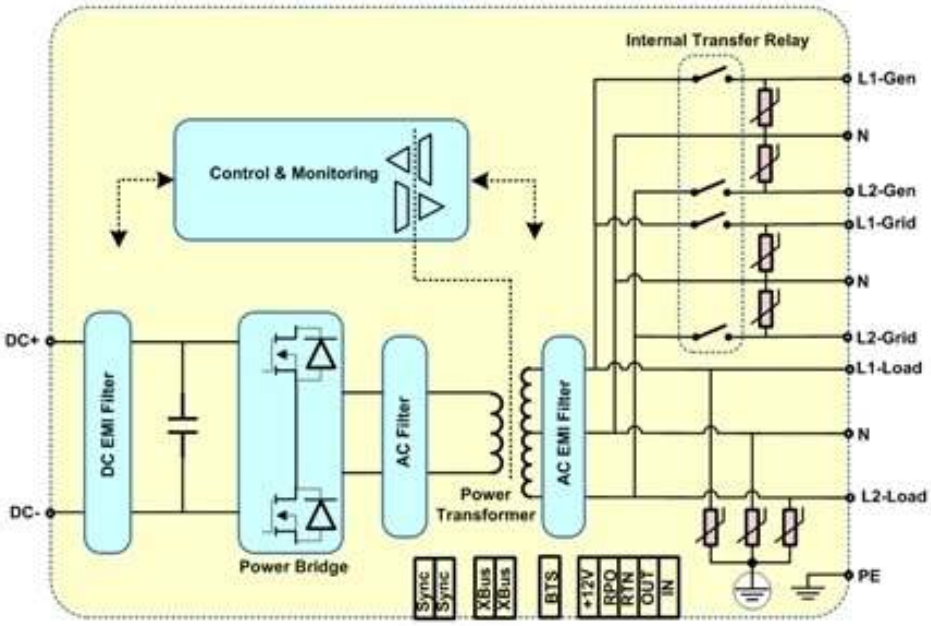

Regulatory Approvals

Electromagnetic Compatibility

The XW Pro inverter complies with emission limits specified in:

- FCC Part 15B Class B limits
- Industry Canada ICES-003 Class B limits

Utility Interactive

XW Pro inverter qualifies as a Smart Inverter[3] and complies with multiple jurisdictions grid interconnection standard requirements that are currently in effect in different jurisdictions:

- UL1741, 2nd Edition -2018 (“UL1741SA”)
- CSA 107.1-2016
- IEEE 1547-2003 Standard for Interconnecting DER with Electric Power Systems
- IEEE 1547.1-2005
- IEEE 1547a-2014 (Amd 1)
- California Rule 21
- Hawaiian Electric Company (HECO)
- Puerto Rico Energy Power Authority (PREPA)

Grid Support Utility Interactive Functions

These Grid Support Utility Interactive Functions are included in the XW Pro inverter:

- Anti-Islanding
- Voltage Ride-Through (L/HVRT) and disconnection
- Frequency Ride-Through (L/HFRT) and disconnection
    - Available for HECO settings and modified Molokai and Lanai ride through and disconnect settings as well.
- Volt-Var Q(V)
- Soft Start (SS)
- Ramp Rate (RR)
- Fixed Power Factor (FPF)
- Frequency-Watt P(f)
- Volt-Watt P(V)
- TROV
- Voltage and Frequency Reconnection

[3] A Smart Inverter is a Distributed Energy Resource (DER) that autonomously performs functions that minimize the risk of unstable grid operations by providing dynamic active and reactive power support, voltage and frequency ride-through, ramp-rate control and other functions.

7 Wiring Diagrams

What's in This Chapter?

Wiring Diagrams ***131***
Single-Inverter System (Backup Only) Without a Power Distribution Panel (PDP) .. *132*
Single-Inverter System (Backup Only) With a Power Distribution Panel (PDP) *133*
Single-Inverter System Renewable Energy (Solar) *134*
Dual-Inverter System Renewable Energy (Solar) *135*

Wiring Diagrams

The diagrams in this chapter illustrate the most basic configurations and are for reference only. Specific installations may require additional equipment to meet national or local electric codes. Ensure that all safety requirements are strictly followed.

Single-Inverter System (Backup Only) Without a Power Distribution Panel (PDP)

Figure 71 Single-Inverter System (Backup Only) Without a Power Distribution Panel (PDP)

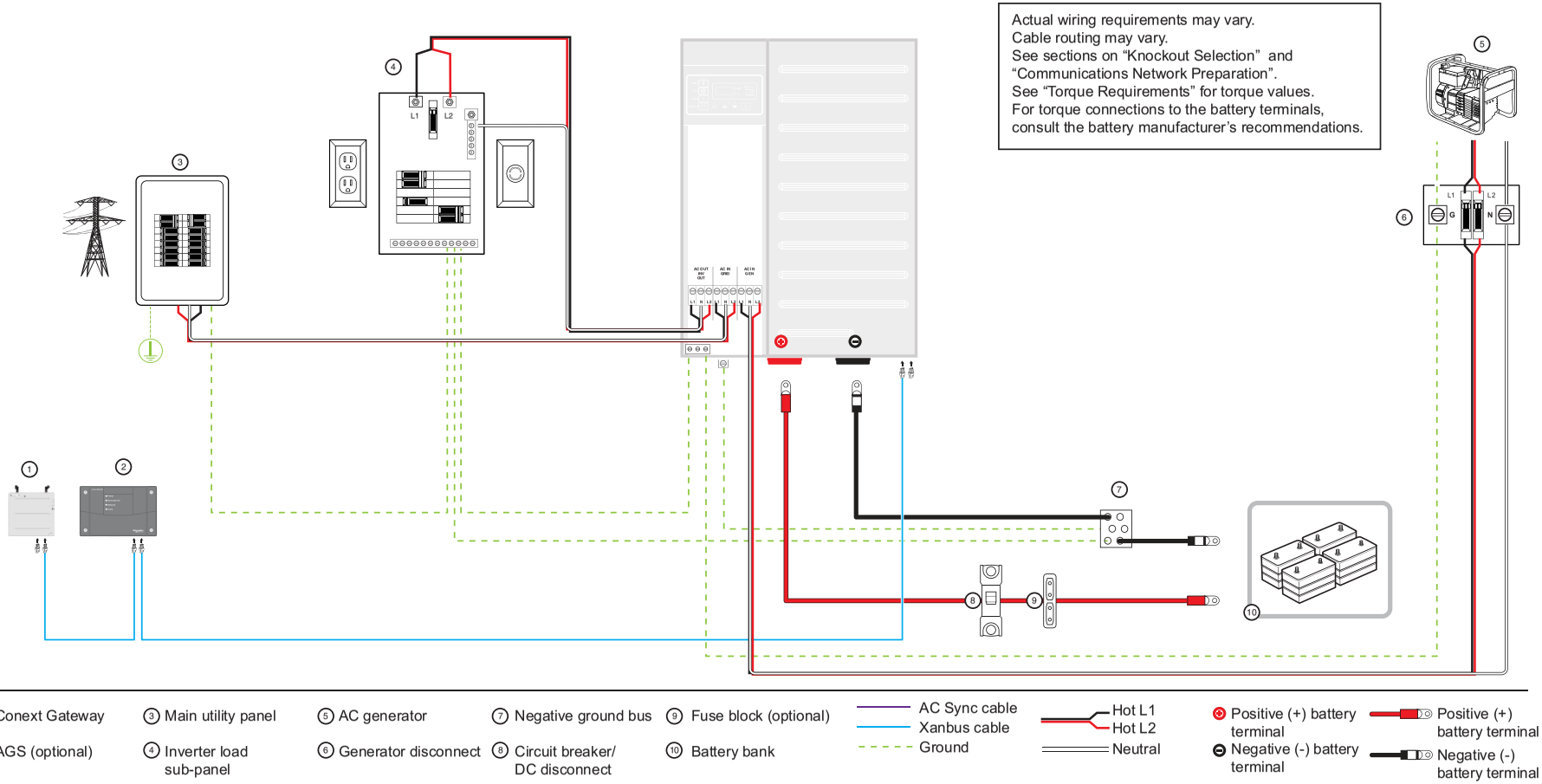

1. Conext Gateway
2. AGS (optional)
3. Main utility panel
4. Inverter load sub-panel
5. AC generator
6. Generator disconnect
7. Negative ground bus
8. Circuit breaker/ DC disconnect
9. Fuse block (optional)
10. Battery bank

AC Sync cable
Xanbus cable
Ground
Hot L1
Hot L2
Neutral
Positive (+) battery terminal
Negative (-) battery terminal
Positive (+) battery terminal
Negative (-) battery terminal

Single-Inverter System (Backup Only) With a Power Distribution Panel (PDP)

Figure 72 Single-Inverter System (Backup Only) With a Power Distribution Panel (PDP)

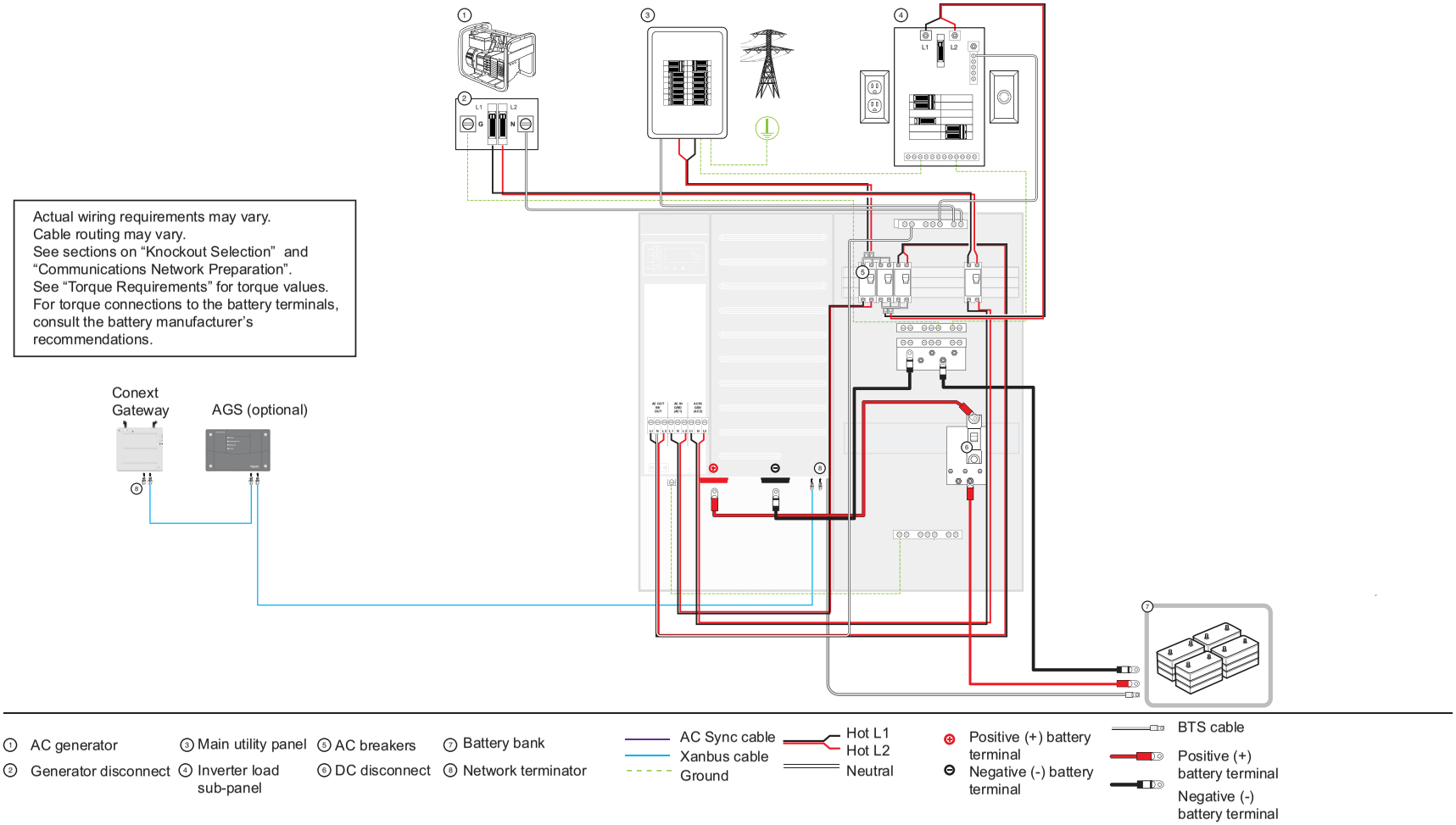

① AC generator
② Generator disconnect
③ Main utility panel
④ Inverter load sub-panel
⑤ AC breakers
⑥ DC disconnect
⑦ Battery bank
⑧ Network terminator

AC Sync cable
Xanbus cable
Ground
Hot L1
Hot L2
Neutral
Positive (+) battery terminal
Negative (-) battery terminal
BTS cable
Positive (+) battery terminal
Negative (-) battery terminal

Single-Inverter System Renewable Energy (Solar)

Figure 73 Single-Inverter System Renewable Energy (Solar)

Actual wiring requirements may vary.
Cable routing may vary.
See sections on “Knockout Selection” and “Communications Network Preparation”.
See “Torque Requirements” for torque values.
For torque connections to the battery terminals, consult the battery manufacturer’s recommendations.

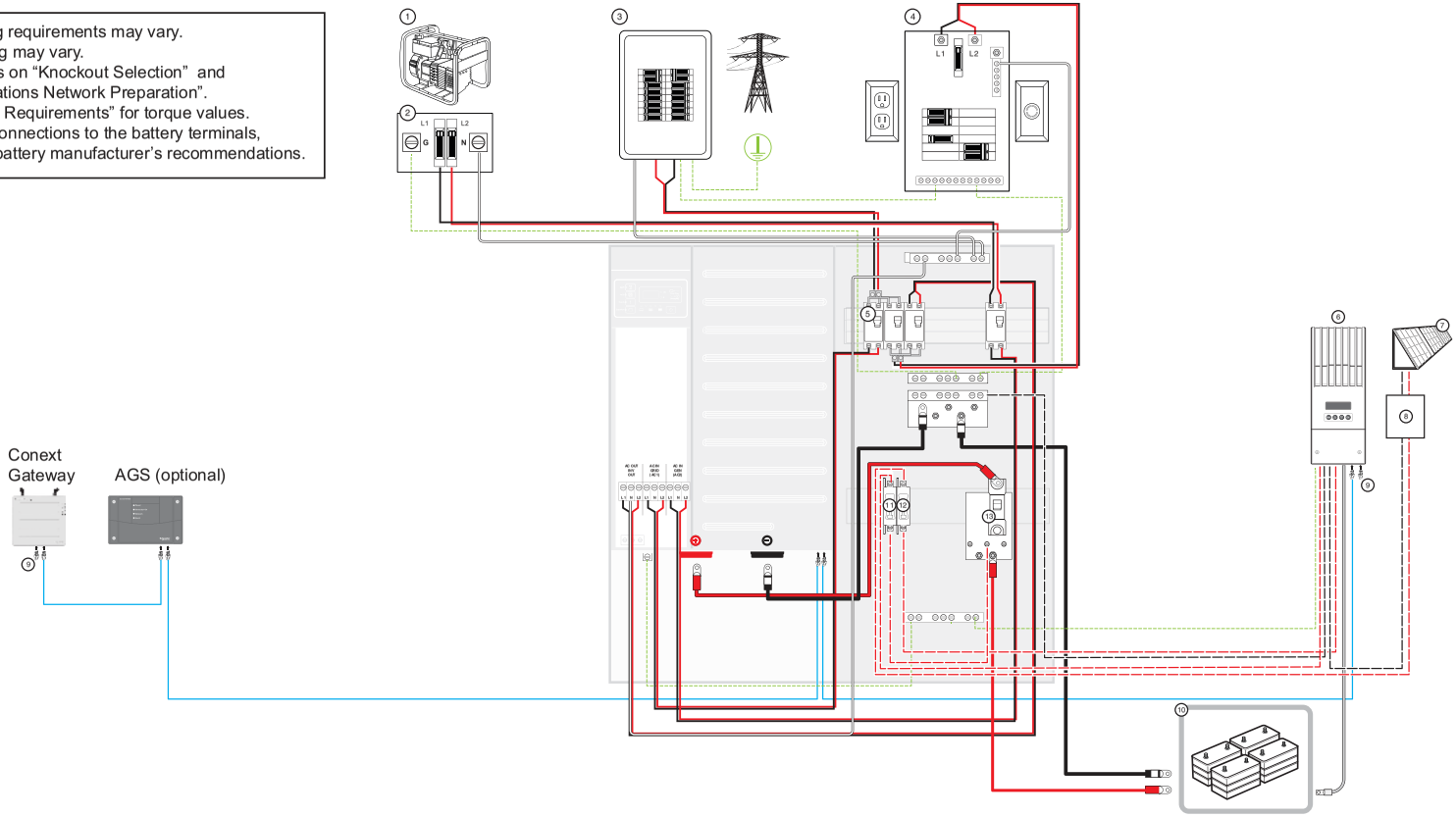

① AC generator
② Generator disconnect
③ Main utility panel
④ Inverter load sub-panel
⑤ AC breakers
⑥ Conext MPPT 60 150 solar charge controller*
⑦ PV array
⑧ DC combiner box
⑨ Network terminator
⑩ Battery bank
⑪ CC
⑫ PV*

AC Sync cable
Xanbus cable

DC positive (+)
DC negative (-)
Ground

Hot L1
Hot L2
Neutral

Positive (+) battery terminal
Negative (-) battery terminal

BTS cable
Positive (+) battery terminal
Negative (-) battery terminal

* Do not install a PV disconnect or PV breaker for the MPPT 80 600 or MPPT 100 600 charge controller in the PDP. Both the PDP and the PV Breaker are rated for maximum 150 Vdc which is only compatible with the PV input of the MPPT 60 150 charge controller. The PV input of the MPPT 80 600 and MPPT 100 600 requires a 600 Vdc rated disconnect installed outside of the PDP for the PV input (MPPT Disconnect RS or suitably rated safety switch).

Dual-Inverter System Renewable Energy (Solar)

Figure 74 Dual-Inverter System Renewable Energy (Solar)

Actual wiring requirements may vary.
Cable routing may vary.
See sections on “Knockout Selection” and “Communications Network Preparation”.
See “Torque Requirements” for torque values.
For torque connections to the battery terminals, consult the battery manufacturer’s recommendations.

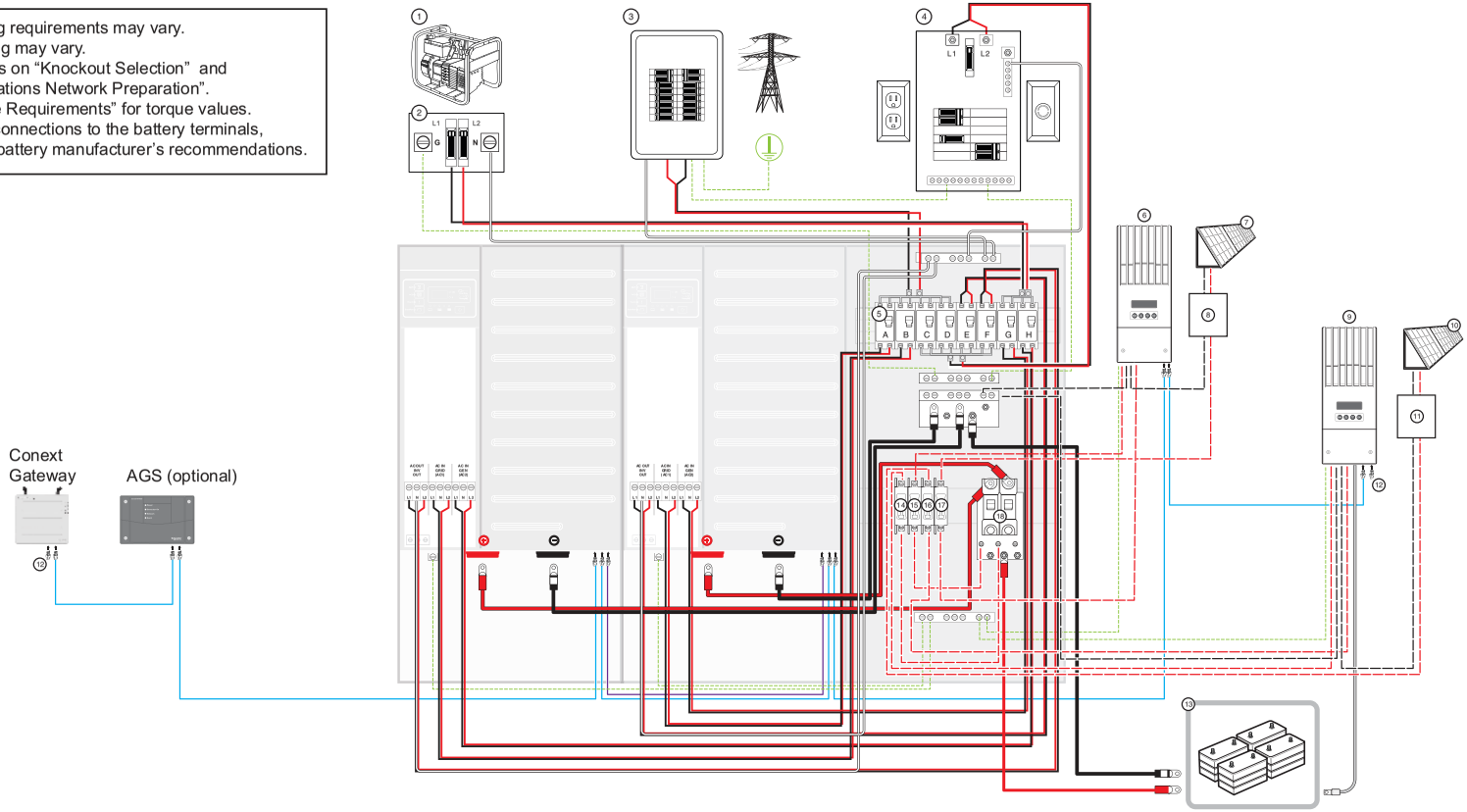

① AC generator
② Generator disconnect
③ Main utility panel
④ Inverter load sub-panel
⑤ AC breakers
⑥ MPPT solar charge controller 1*
⑦ PV array 1
⑧ DC combiner box 1
⑨ MPPT solar charge controller 2*
⑩ PV array 2
⑪ DC combiner box 2
⑫ Network terminator
⑬ Battery bank
⑭ CC 2
⑮ CC 1
⑯ PV 2*
⑰ PV 1*
⑱ DC disconnect

A. INV1 IN (Grid)
B. INV2 IN (Grid)
C. Grid bypass
D. Grid bypass
E. INV1 OUT (AC loads)
F. INV2 OUT (AC loads)
G. INV1 IN (Gen)
H. INV2 IN (Gen)

AC Sync cable
Xanbus cable
DC positive (+)
DC negative (-)
Ground
Hot L1
Hot L2
Neutral
Positive (+) battery terminal
Negative (-) battery terminal
BTS cable
Positive (+) battery terminal
Negative (-) battery terminal

* Do not install a PV disconnect or PV breaker for the MPPT 80 600 or MPPT 100 600 charge controller in the PDP. Both the PDP and the PV Breaker are rated for maximum 150 Vdc which is only compatible with the PV input of the MPPT 60 150 charge controller. The PV input of the MPPT 80 600 and MPPT 100 600 requires a 600 Vdc rated disconnect installed outside of the PDP for the PV input (MPPT Disconnect RS or suitably rated safety switch).

8 Converting Split-phase to Single-phase

What's in This Chapter?

Converting 120 V/240 V Split-phase to 120 V Single-phase *137*
Installation Tools and Materials *138*
Disconnecting Power Sources *138*
AC Access Panel Removal *139*
Reconfiguring the Secondary Transformer Wires on X1 and X2 Connectors *141*
Reconfiguring the AC Ports on the Load, AC1, and AC2 Connectors *143*
Replacing the Firmware *144*
Updating the Label *145*

Converting 120 V/240 V Split-phase to 120 V Single-phase

This chapter explains how to convert a standard 120 V/240 V, three-wire, split-phase XW Pro model to accept a 120 V, 2-wire, single-phase connection.

Converting from 120 V/240 V split-phase to 120 V single-phase is required in systems with single-phase (2-wire 120 V) or three-phase (208/120 V) sources. For a three-phase system, the loads may consist of single-phase loads or three-phase loads.

DANGER

HAZARD OF ELECTRIC SHOCK, EXPLOSION, ARC FLASH, AND FIRE

- Apply appropriate personal protective equipment (PPE) and follow safe electrical work practices. See NFPA 70E or CSA Z462.
- This equipment must only be installed and serviced by qualified electrical personnel.
- Never operate energized with covers removed
- Energized from multiple sources. Before removing covers identify all sources, de-energize, lock-out, and tag-out and wait 5 minutes for circuits to discharge
- Always use a properly rated voltage sensing device to confirm all circuits are de-energized.

Failure to follow these instructions will result in death or serious injury.

DANGER

HAZARD OF ELECTRIC SHOCK, EXPLOSION, ARC FLASH, AND FIRE

- Remove watches, rings, or other metal objects.
- This equipment must only be installed and serviced by qualified electrical personnel.
- Keep sparks and flames away from the batteries.
- Use tools with insulated handles.
- Wear protective glasses, gloves and boots.
- Do not lay tools or other metal parts on top of batteries.

Failure to follow these instructions will result in death or serious injury.

DANGER

HAZARD OF ELECTRIC SHOCK, EXPLOSION, ARC FLASH, AND FIRE

- Battery Circuit Breakers must be installed according to the specifications and requirements defined by Schneider Electric.
- Servicing of batteries must only be performed by qualified personnel knowledgeable of batteries and the required precautions. Keep unqualified personnel away from batteries.
- Disconnect the charging source prior to connecting or disconnecting battery terminals.

Failure to follow these instructions will result in death or serious injury.

Note: To complete the conversion, you must refer to firmware upgrade instructions in the Conext Gateway Owner's Guide (975-0806-01-01) available from http://solar.schneider-electric.com.

Note: To set up a three-phase system using three 120 V-configured XW Pro units, perform the conversion procedure for all three XW Pros.

Installation Tools and Materials

To complete the conversion, you will need the following:

- a Phillips #2 screwdriver
- one small jumper and three large jumpers, included with the XW Pro, see *Figure 75* .

Figure 75 XW Pro Jumpers

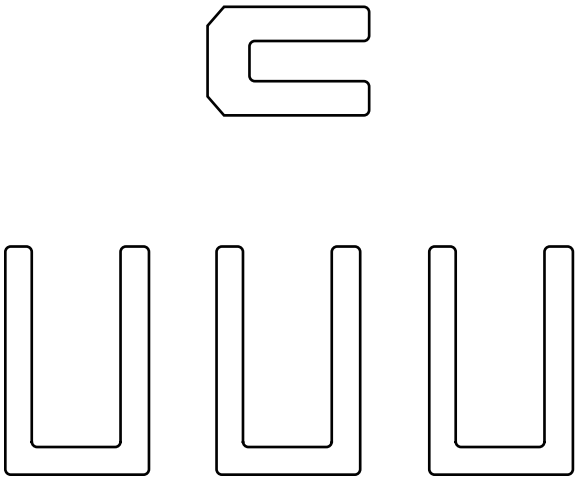

Disconnecting Power Sources

To disconnect power sources:

1. Put the XW Pro system in Standby mode (for more information about standby mode, see the Owner's Guide), disconnect AC sources (such as the utility grid and generators) by turning off the AC input breakers, and disconnect DC sources (for example, batteries) by turning off the DC breaker.
2. Turn off and disconnect all AC loads by turning off the AC output breaker.

AC Access Panel Removal

DANGER

HAZARD OF ELECTRIC SHOCK, EXPLOSION, ARC FLASH, AND FIRE

- Apply appropriate personal protective equipment (PPE) and follow safe electrical work practices. See NFPA 70E or CSA Z462.
- This equipment must only be installed and serviced by qualified electrical personnel.
- Never operate energized with covers removed
- Energized from multiple sources. Before removing covers identify all sources, de-energize, lock-out, and tag-out and wait 5 minutes for circuits to discharge
- Always use a properly rated voltage sensing device to confirm all circuits are de-energized.

Failure to follow these instructions will result in death or serious injury.

DANGER

HAZARD OF ELECTRIC SHOCK, EXPLOSION, ARC FLASH, AND FIRE

- Remove watches, rings, or other metal objects.
- This equipment must only be installed and serviced by qualified electrical personnel.
- Keep sparks and flames away from the batteries.
- Use tools with insulated handles.
- Wear protective glasses, gloves and boots.
- Do not lay tools or other metal parts on top of batteries.

Failure to follow these instructions will result in death or serious injury.

DANGER

HAZARD OF ELECTRIC SHOCK, EXPLOSION, ARC FLASH, AND FIRE

- Battery Circuit Breakers must be installed according to the specifications and requirements defined by Schneider Electric.
- Servicing of batteries must only be performed by qualified personnel knowledgeable of batteries and the required precautions. Keep unqualified personnel away from batteries.
- Disconnect the charging source prior to connecting or disconnecting battery terminals.

Failure to follow these instructions will result in death or serious injury.

To remove the AC access panel, remove the two screws from the AC access cover and slide the cover slightly to the left and lift away from the XW Pro chassis.

Installation tip

For easier access, first remove the right-side panel of the XW Pro, as shown in *Figure 76* .

When re-securing the AC access cover, ensure its recessed edge slips inside the edge of the front panel.

Figure 76 AC Access Panel Removal

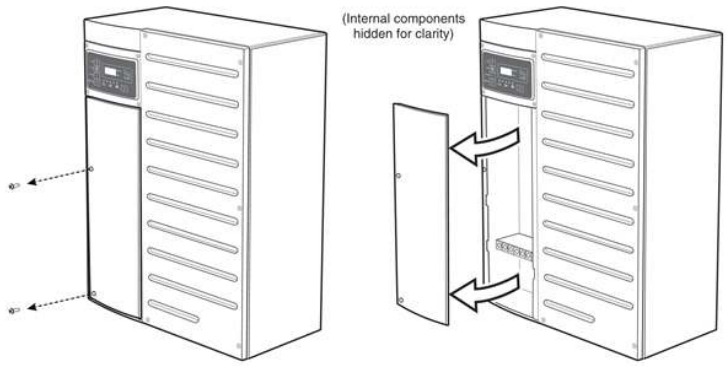

Reconfiguring the Secondary Transformer Wires on X1 and X2 Connectors

To reconfigure the secondary transformer wires on the X1 and X2 connectors:

1. Locate the X1 and X2 connectors (shown below).

   Figure 77 Connector Locations

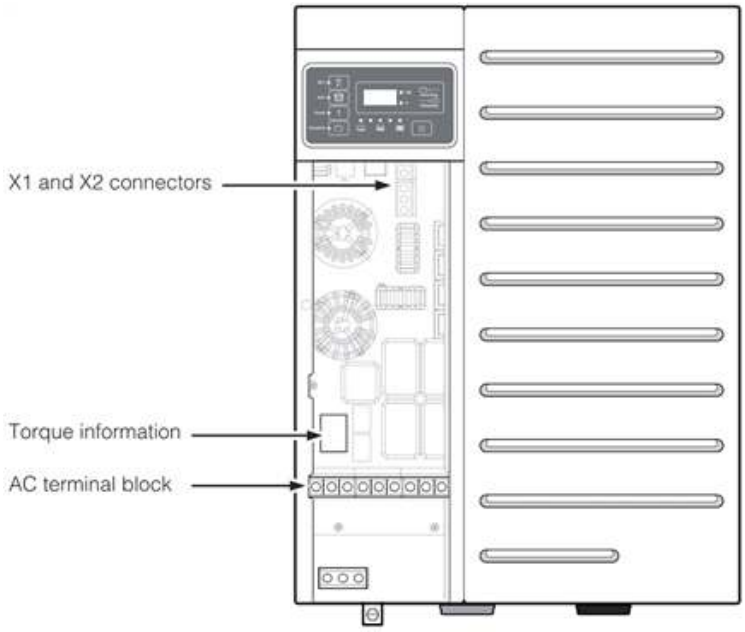

2. Remove the secondary transformer wire X2 (black) from slot X2-A, and then insert it into slot X2-B, see *Figure 78* and *Figure 79* .
3. Remove the secondary transformer wire X3 (white) from slot X3-A, and then insert it into slot X3-B, see *Figure 78* and *Figure 79* .
4. Insert one small jumper between slot X2-A and X2-B, see *Figure 78* and *Figure 79* . Insert jumper on top of the wire.
5. Tighten all terminals to 35 in-lb (4.0 N-m) per the torque information printed on the AC board. See *Figure 77* for the torque information location.

Figure 78 Slot Locations on X1 and X2 Connectors

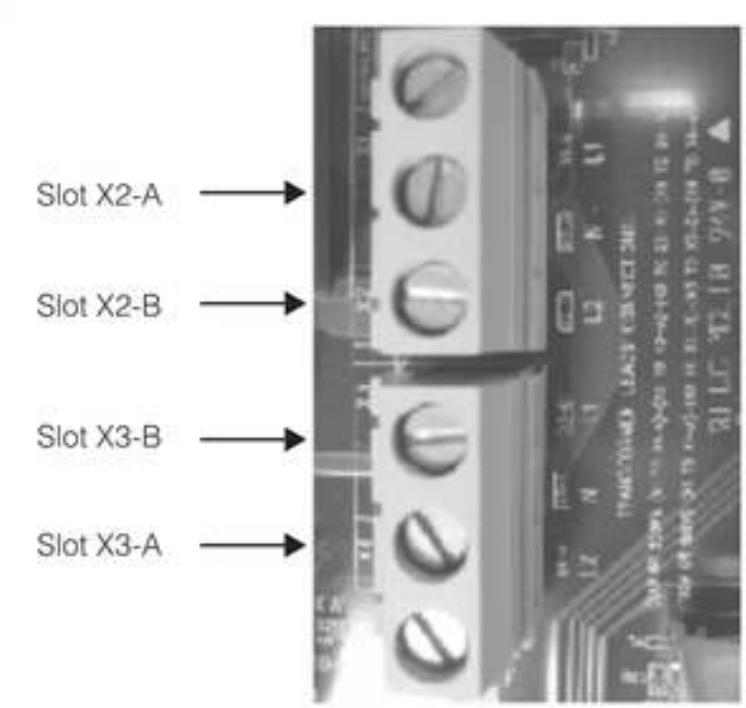

Figure 79 X1 and X2 Connectors Before and After Reconfiguration

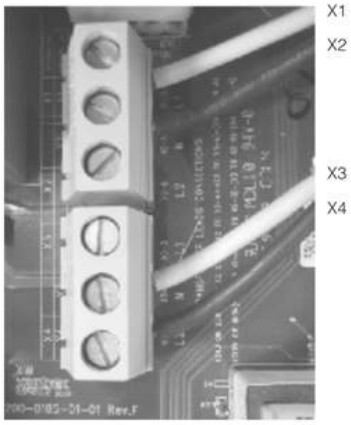

Secondary transformer wire X1, X2, X3, and X4 locations BEFORE reconfiguration

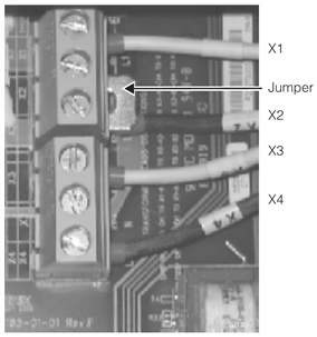

Secondary transformer wire X1, X2, X3, and X4 locations AFTER reconfiguration

Reconfiguring the AC Ports on the Load, AC1, and AC2 Connectors

To reconfigure the AC ports on the Load, AC1 (Grid), and AC2 (Gen) connectors:

1. Locate the Load, AC1 (Grid), and AC2 (Gen) connectors, see *Figure 80* .
2. Insert one large jumper in each connector to short out N and L2.

   Figure 80 Jumper Locations and AC Cable Configuration on AC Ports

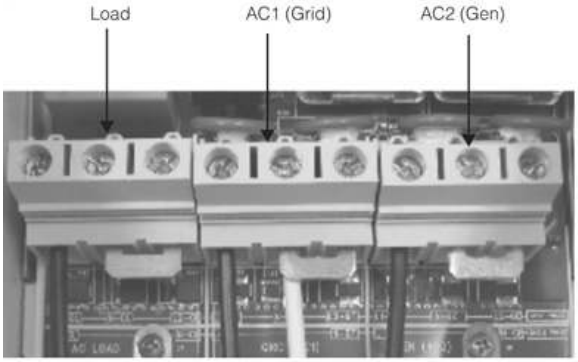

3. Connect the AC cables as shown in *Figure 80* . Insert jumper on top of the wire.
4. Tighten all terminals per the torque information printed on the AC board. See *Figure 77 on page 141* for the torque information location.
5. Reconnect the DC sources (for example, batteries) by turning on the DC breaker.

Replacing the Firmware

After the hardware conversion from split-phase to single-phase is complete, the firmware also needs to be replaced to match.

To replace the firmware:

1. Download the latest firmware for your XW Pro from http://solar.schneider-electric.com and save it onto your computer.
2. After downloading the firmware binary file (.xf0) appropriate for a 120 V single-phase model, rename it by replacing the **6848-22** portion with **6848-21**.
3. Using the Conext Gateway, place the entire system in **Standby** before installing the inverter firmware update.

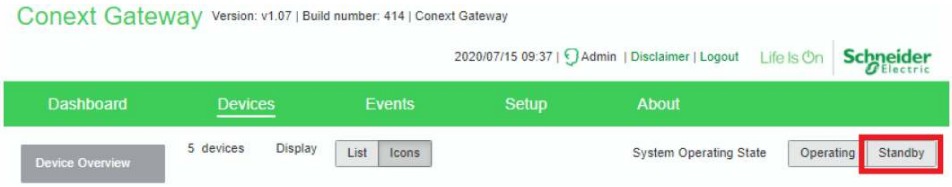

4. Install the firmware on the inverters by clicking Upgrade or Upgrade All XWs for single or multi-unit systems respectively.

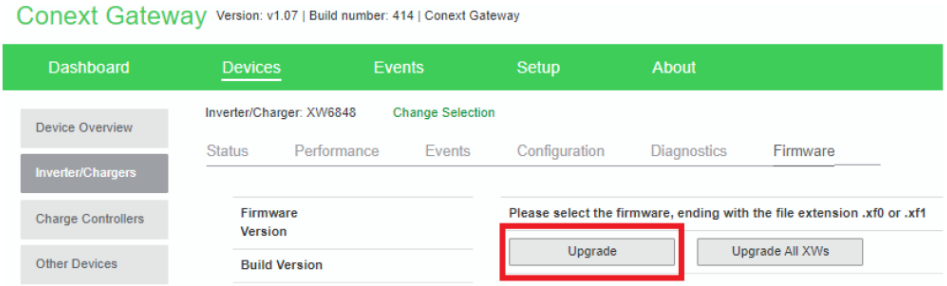

5. Once complete, navigate to the Configuration tab (under Advanced view).
6. Navigate to Controls > Reset, click Reset All Settings to Factory and click Apply. This is to update all model-specific configuration parameters.

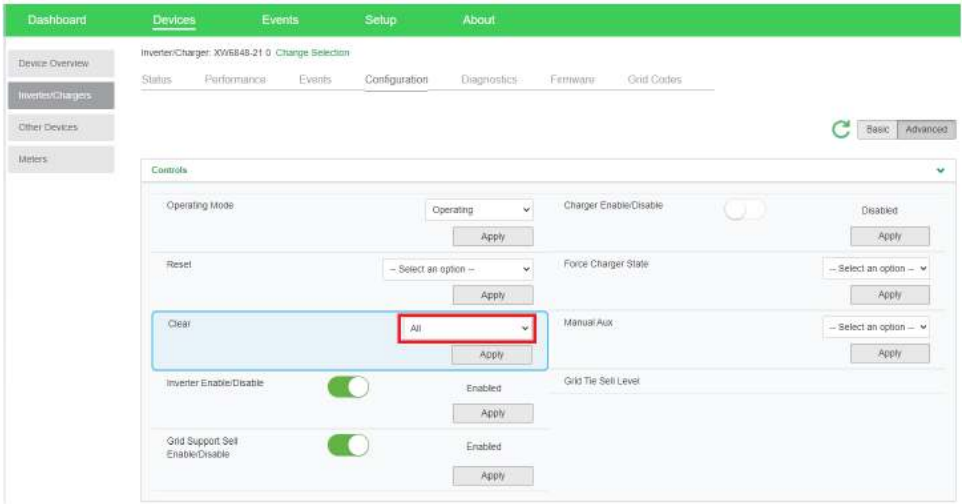

Updating the Label

On the inverter/charger, mark the box on the bottom of the label beside "OPTIONAL CONFIGURATION, 120 V, 2 WIRE" to indicate the inverter has been converted.

Figure 81 Updated Label

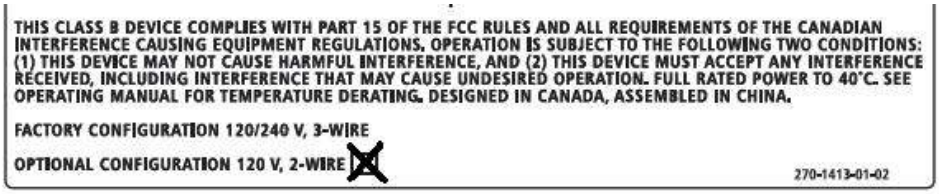
THIS CLASS B DEVICE COMPLIES WITH PART 15 OF THE FCC RULES AND ALL REQUIREMENTS OF THE CANADIAN INTERFERENCE CAUSING EQUIPMENT REGULATIONS. OPERATION IS SUBJECT TO THE FOLLOWING TWO CONDITIONS: (1) THIS DEVICE MAY NOT CAUSE HARMFUL INTERFERENCE, AND (2) THIS DEVICE MUST ACCEPT ANY INTERFERENCE RECEIVED, INCLUDING INTERFERENCE THAT MAY CAUSE UNDESIRED OPERATION. FULL RATED POWER TO 40°C. SEE OPERATING MANUAL FOR TEMPERATURE DERATING. DESIGNED IN CANADA, ASSEMBLED IN CHINA.

FACTORY CONFIGURATION 120/240 V, 3-WIRE

OPTIONAL CONFIGURATION 120 V, 2-WIRE ☒

270-1413-01-02

Schneider Electric

As standards, specifications, and designs change from time to time, please ask for confirmation of the information given in this publication.

For other country details please contact your local Schneider Electric Sales Representative or visit the Schneider Electric Solar Business website at: https://solar.schneider-electric.com

© 2021 Schneider Electric. All Rights Reserved.

990-91228C-01

Printed in: India